Secondary Structure: Group I intron

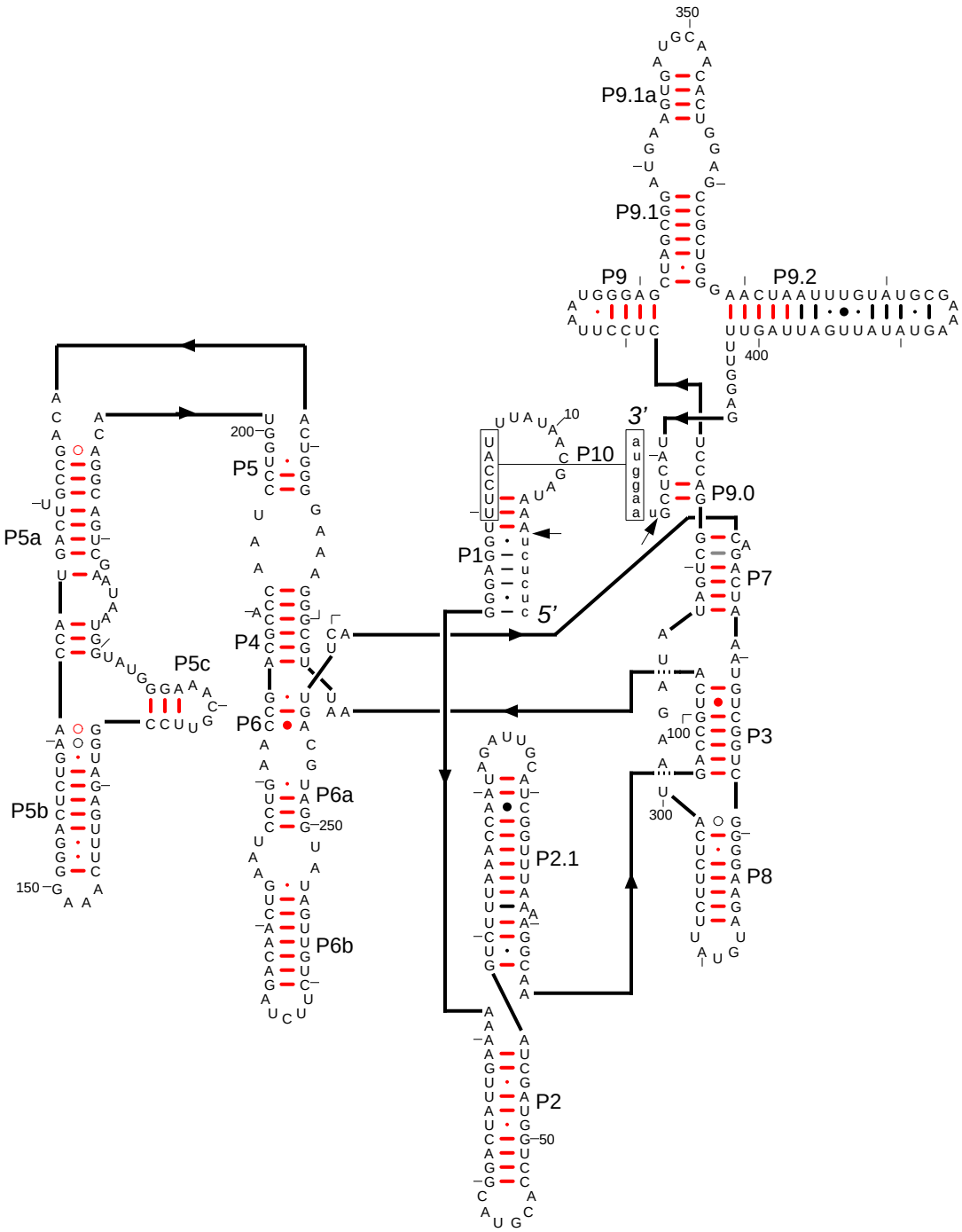

Tetrahymena thermophila:
Nuclear LSU rRNA [i1, 1925]

(V01416 J01235) (IC1)

1.cellular organisms 2.Eukaryota 3.eukaryote crown group
4.Alveolata 5.Ciliophora 6.Oligohymenophorea
7.Hymenostomatida 8.Tetrahymenina 9.Tetrahymena

August 2000

Base pair confidence colors added: February 2002

Citation and related information available at http://www.rna.ccbb.utexas.edu