Secondary Structure: Phe tRNA

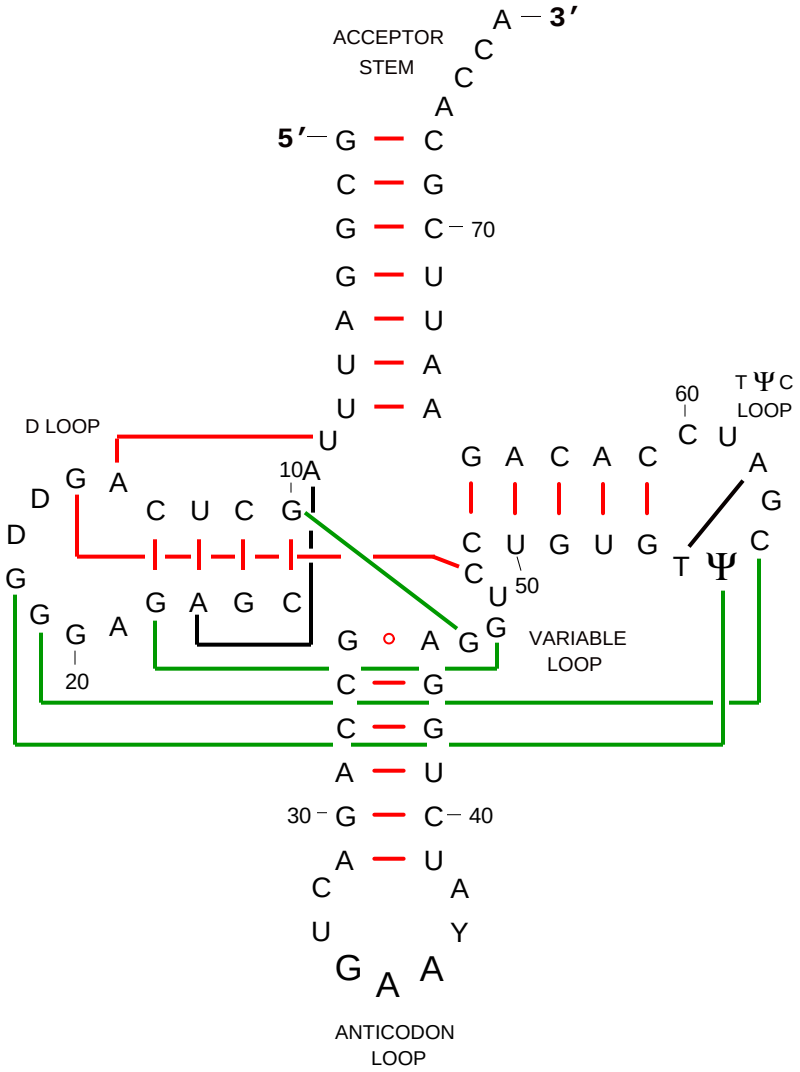

Saccharomyces cerevisiae
(K01553)
1.cellular organisms 2.Eukaryota
3.eukaryote crown group
4.Fungi/Metazoa group 5.Fungi
6.Ascomycota 7.Saccharomycetales
8.Saccharomycetaceae 9.Saccharomyces
July 2001

Citation and related information available at http://www.rna.icmb.utexas.edu