Secondary Structure: Phe tRNA
Reference Sequence Numbering System

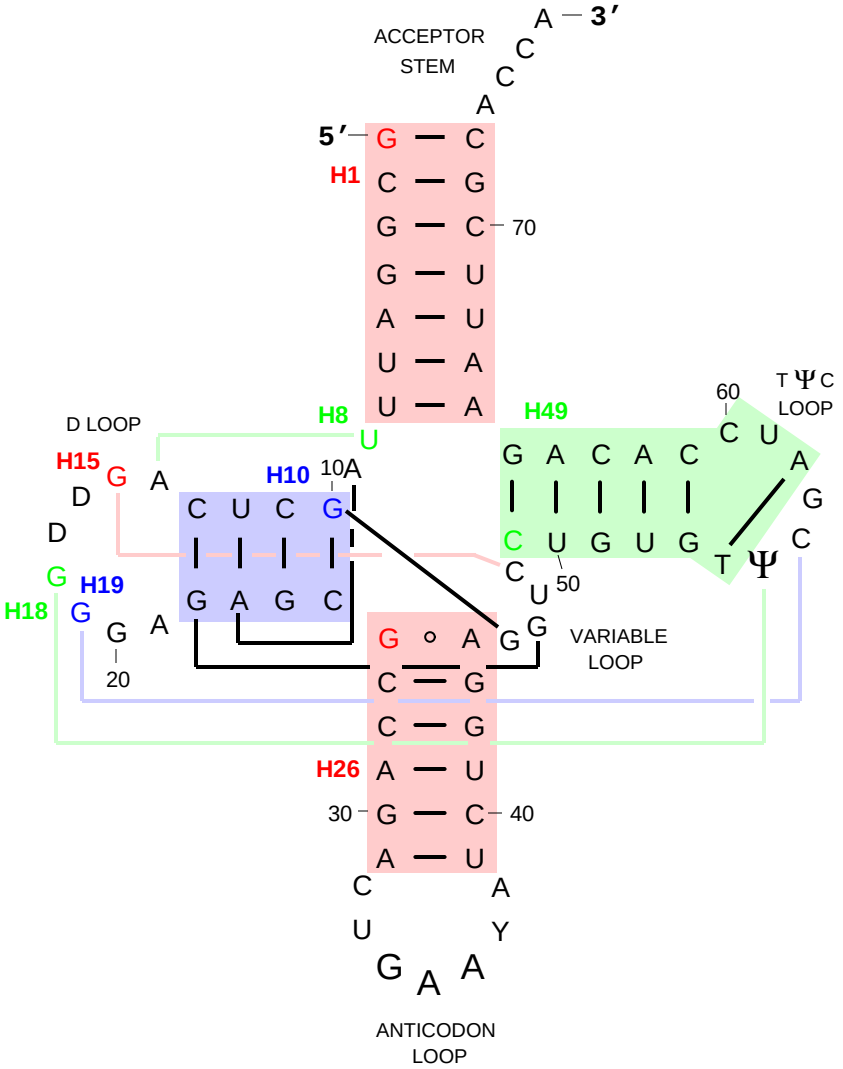

Saccharomyces cerevisiae
(K01553)

Each base pair is numbered: (5':3'), so that the first base pair in this molecule is (1:72).

Each helix is numbered with the 5' nucleotide of the initial base pair; the first helix in this molecule starts with pair (1:72), and is numbered H1.

Helices are shaded (in light red, green, and blue) and labeled with the 'helical element identifier' in the same color. The 5' nucleotide of the initial base pair is colored as well.

Model Version: July 2001
Numbering Diagram Version: November 2001