23S rRNA
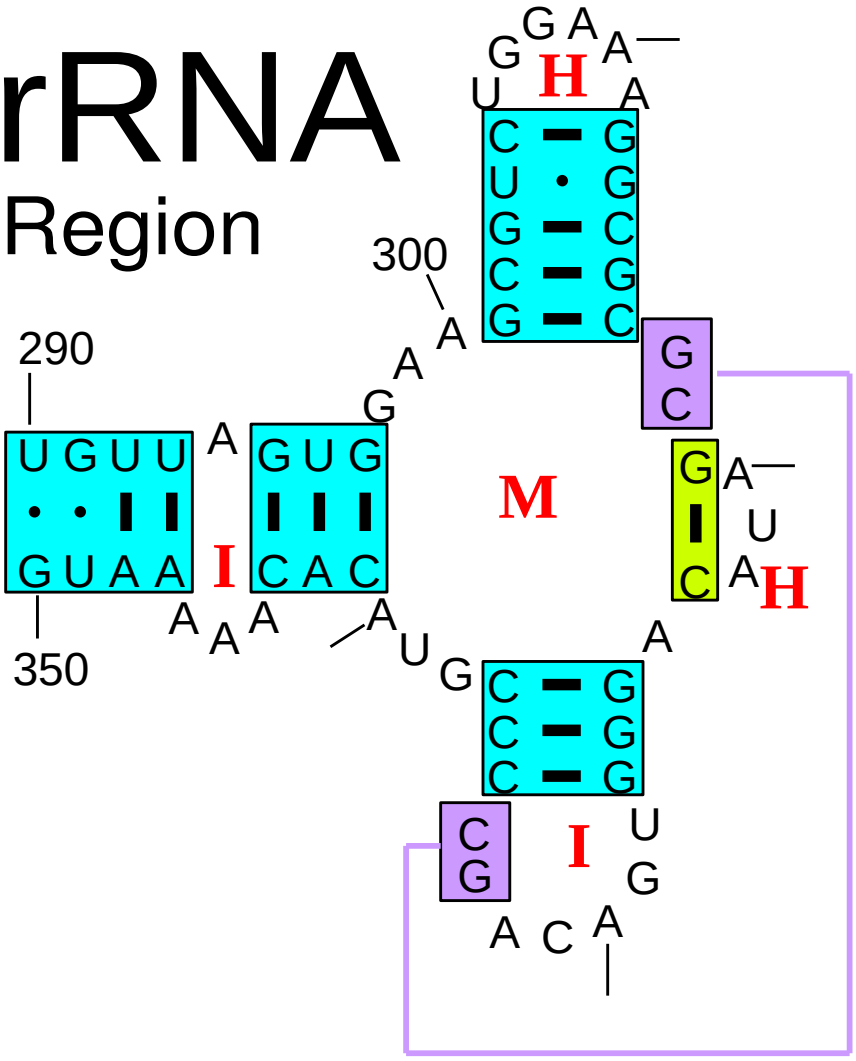
290–350 Region