23S rRNA
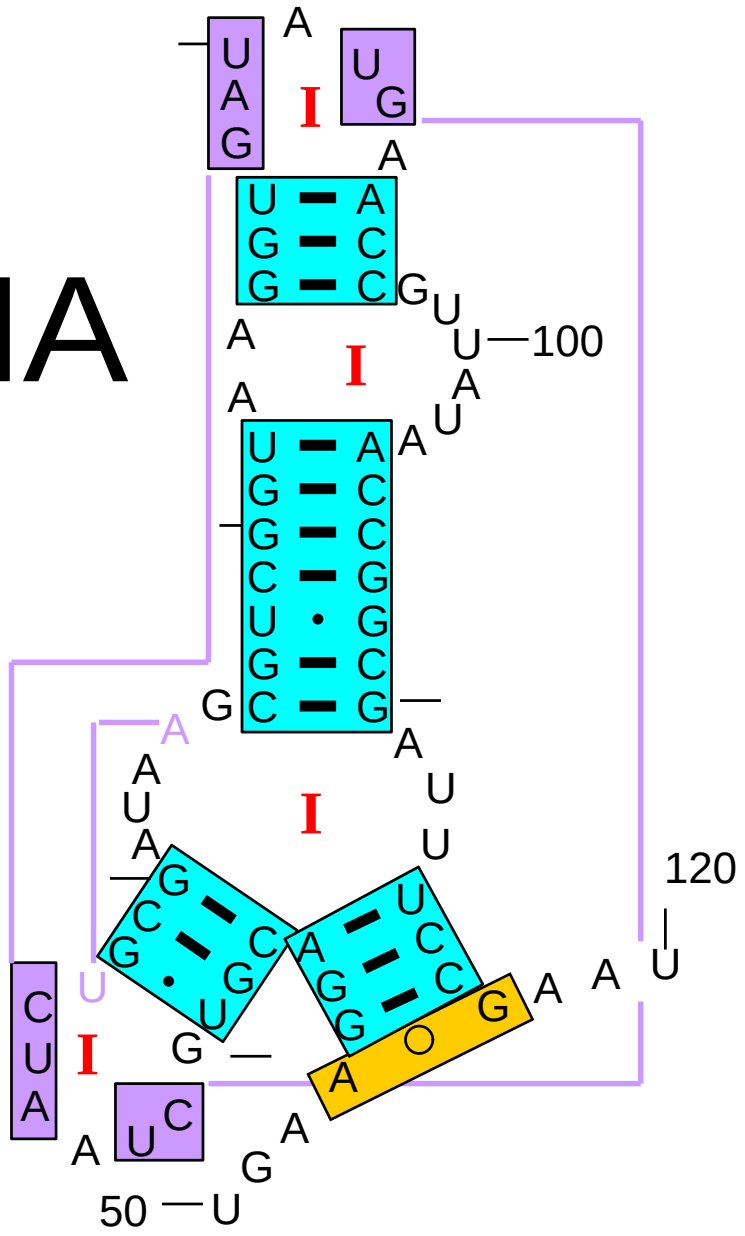
50–120 Region