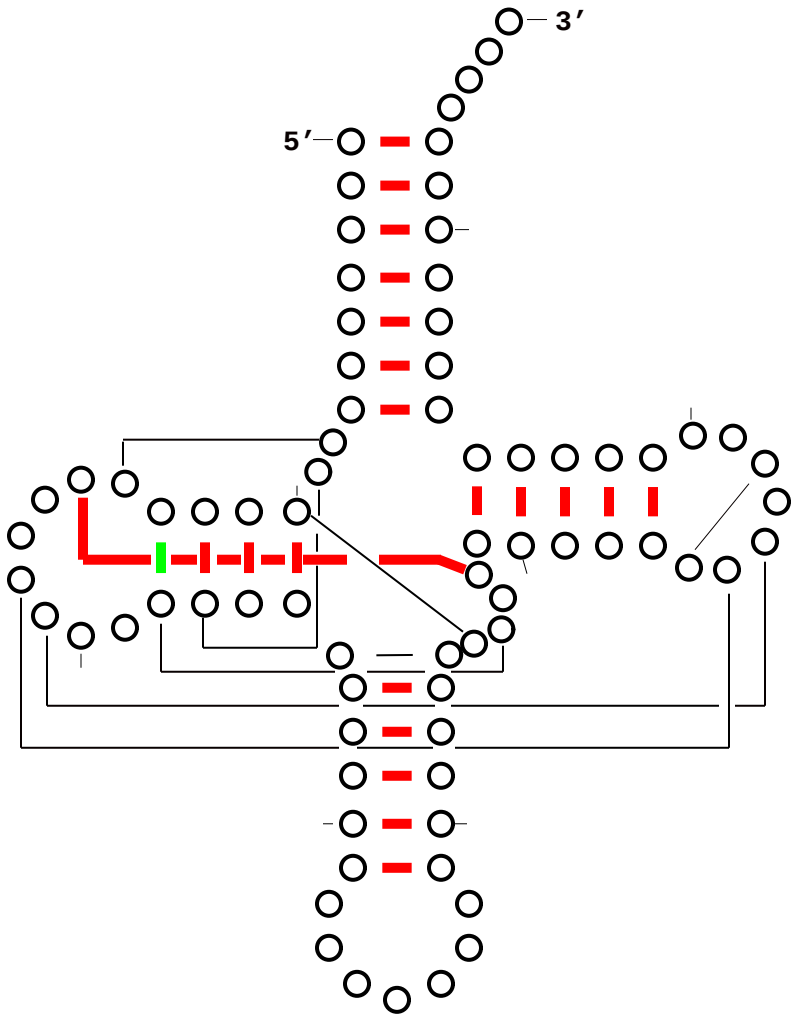tRNA Covary3 - 30 Sequences