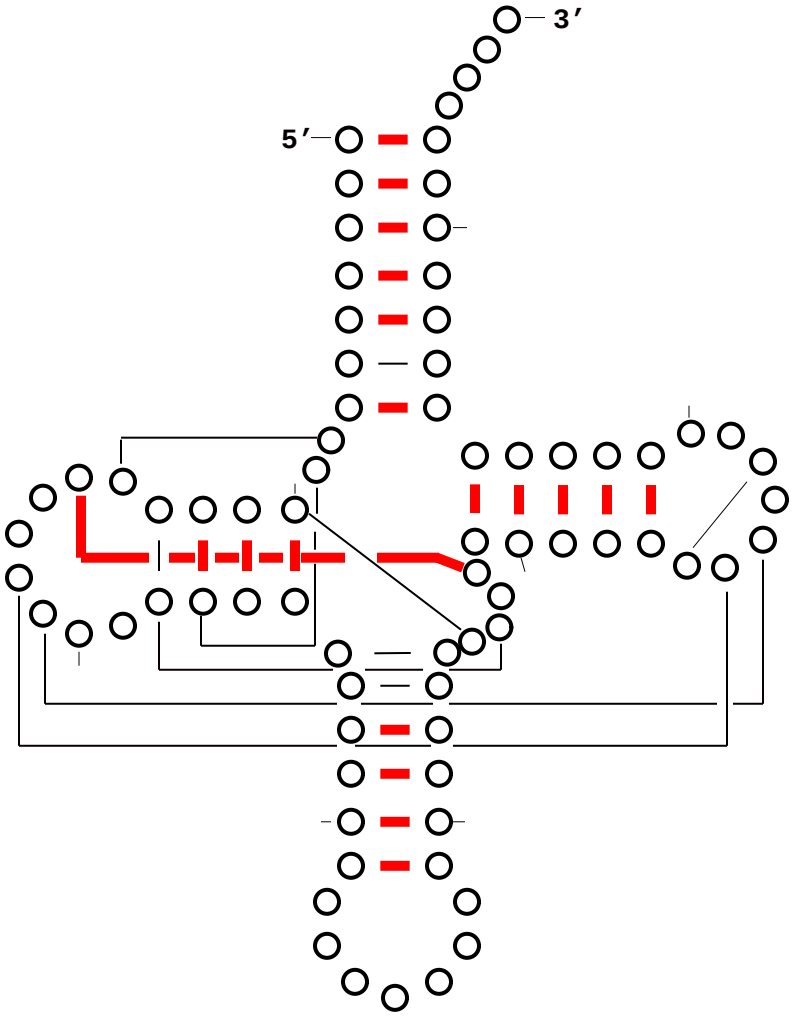tRNA EC -d - 30 Sequences