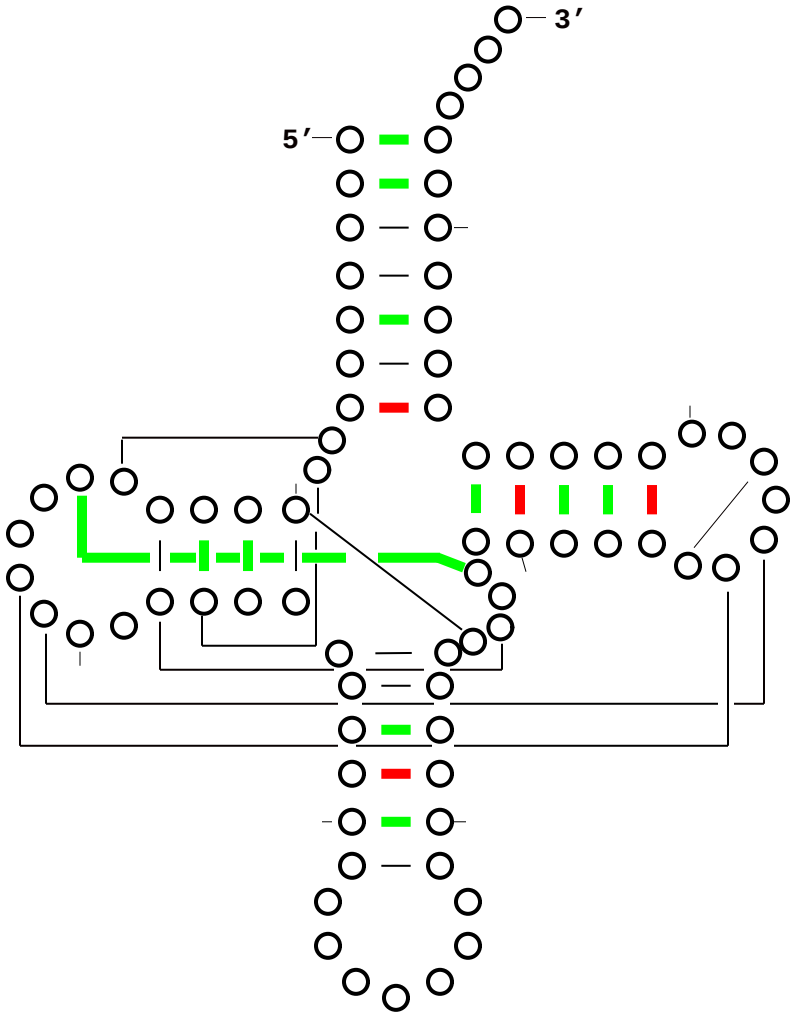tRNA Number Pattern - 30 Sequences