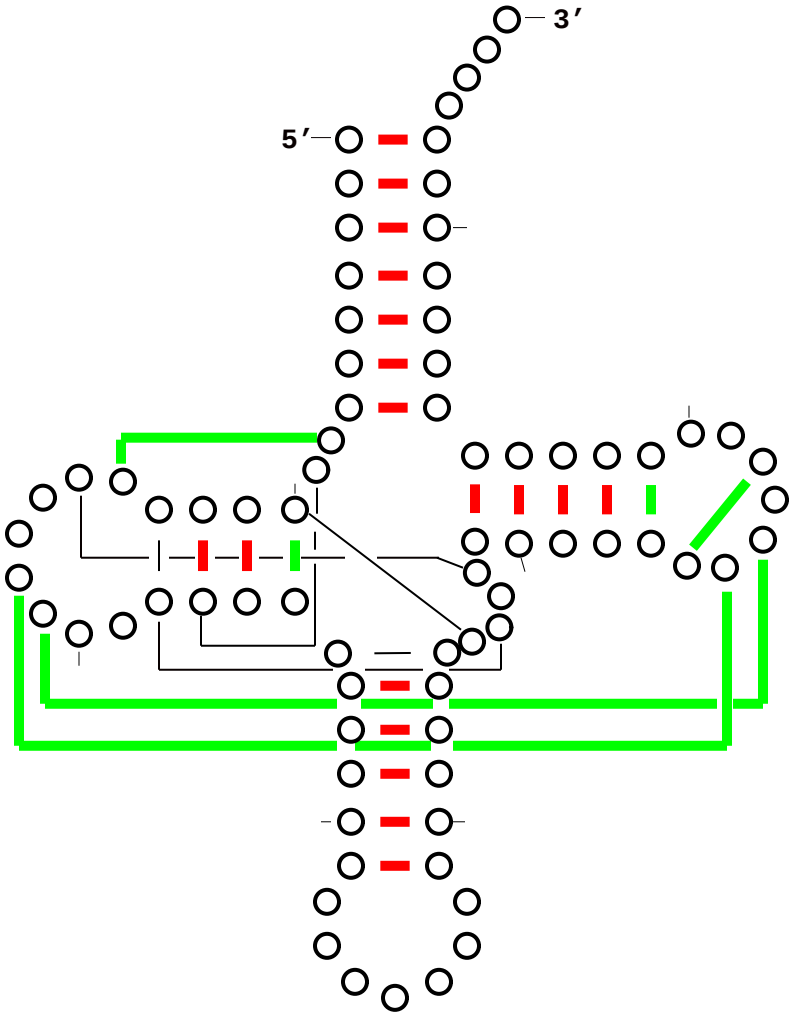tRNA WCGU - 30 Sequences