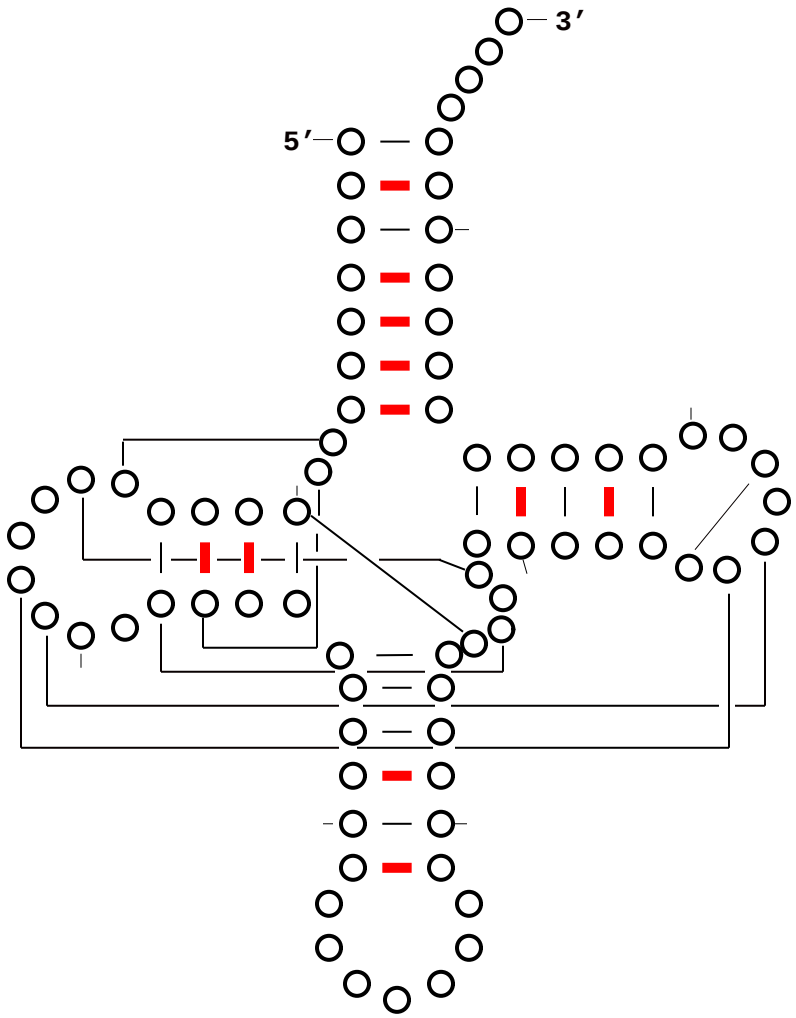tRNA Reddot-Greendot - 53.4% Similarity