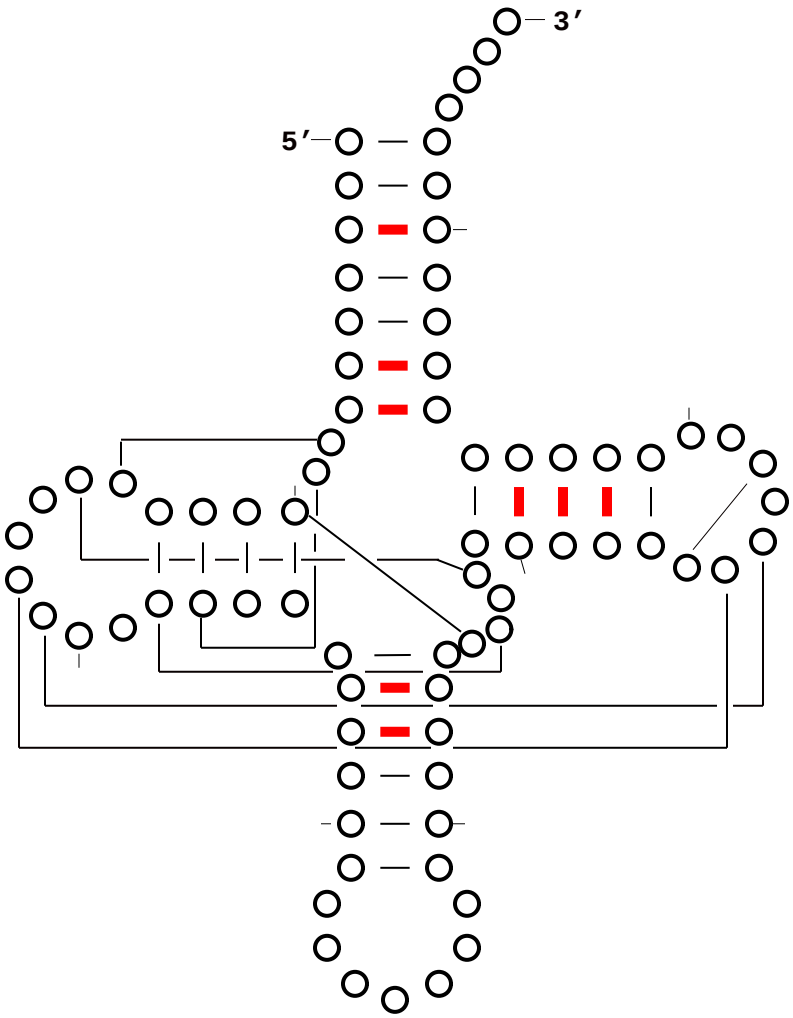tRNA Reddot-Greendot - 72.9% Similarity