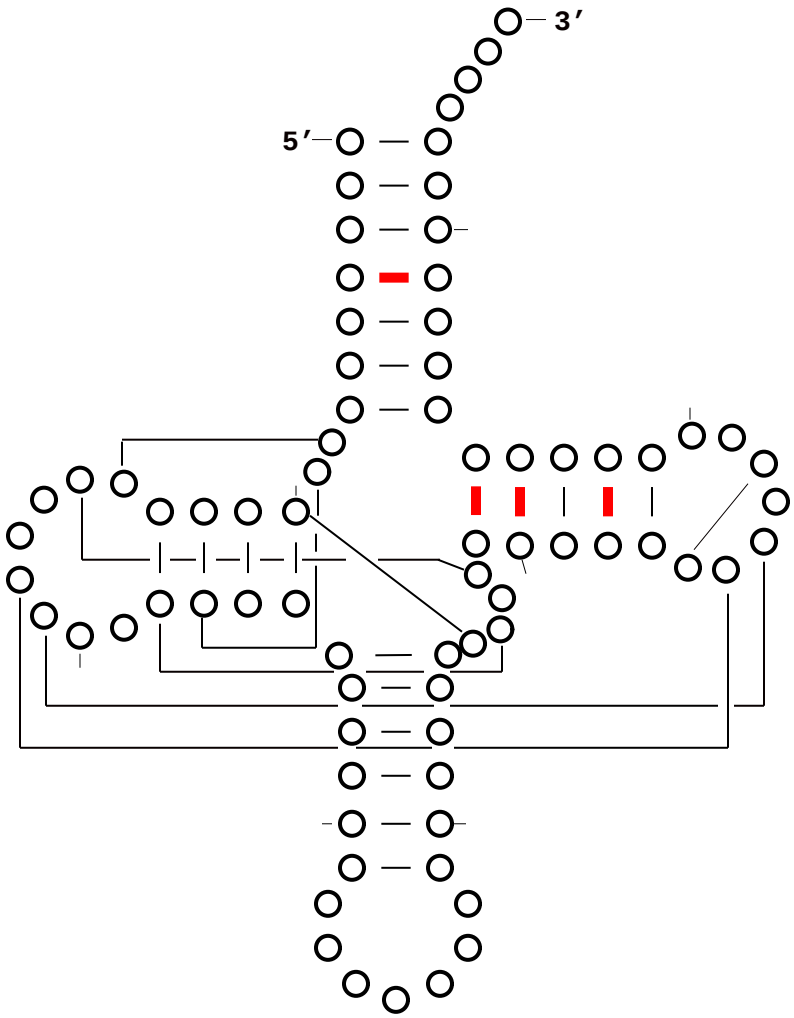tRNA Reddot-Greendot - 85.3% Similarity