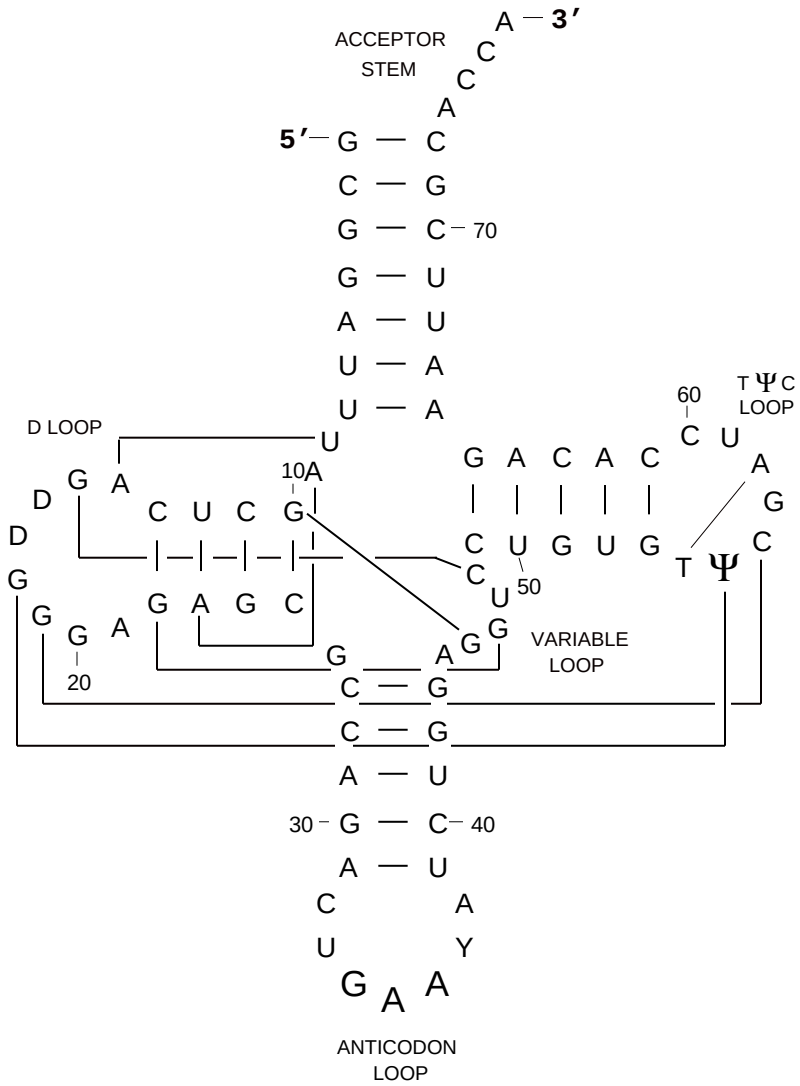YEAST
phe tRNA