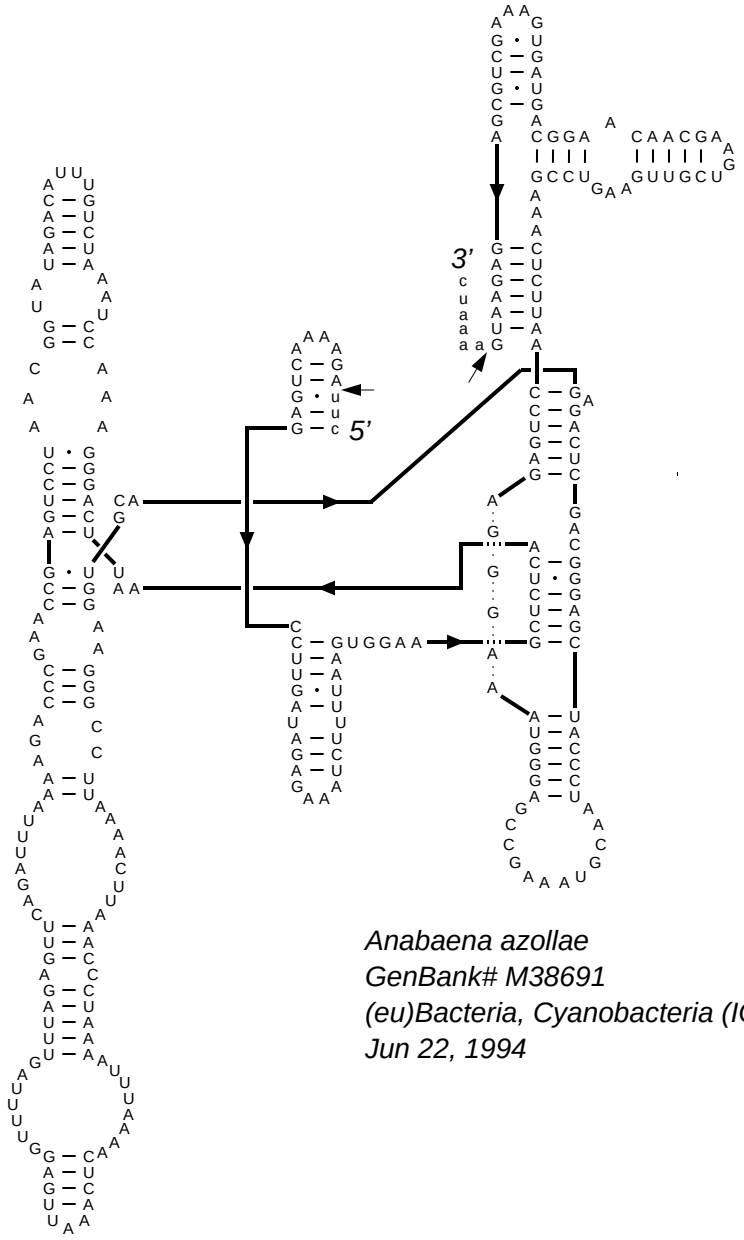

Anabaena azollae
GenBank# M38691
(eu)Bacteria, Cyanobacteria (IC3)
Jun 22, 1994