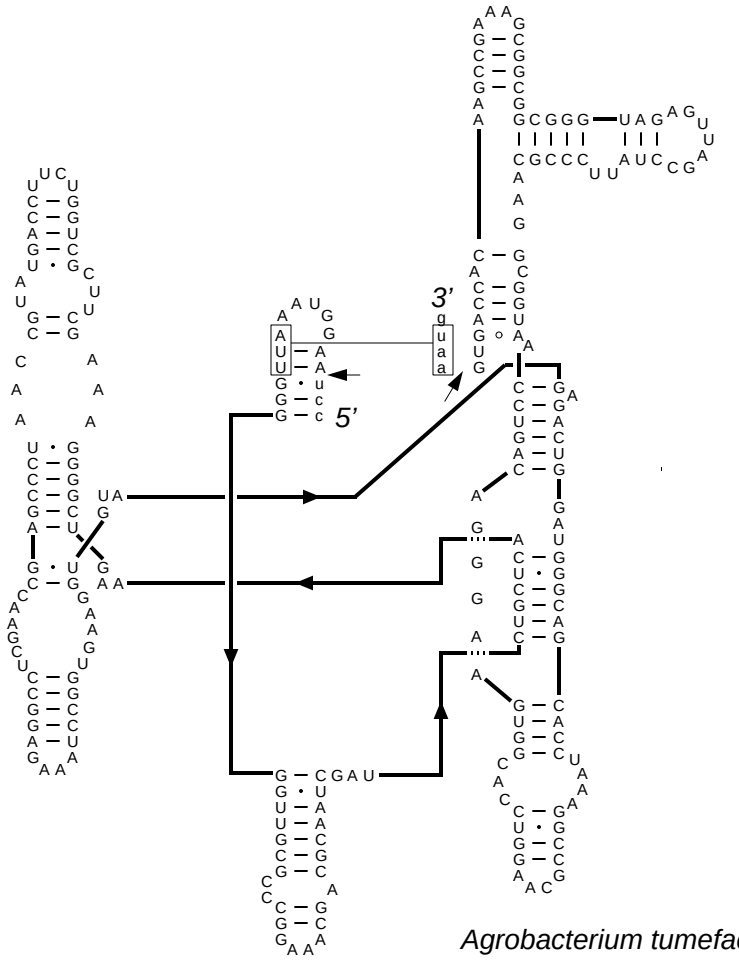

Agrobacterium tumefaciens tRNA arg
GenBank# X66220
(eu)Bacteria, Proteobacteria (IC3)
Feb 15, 1995