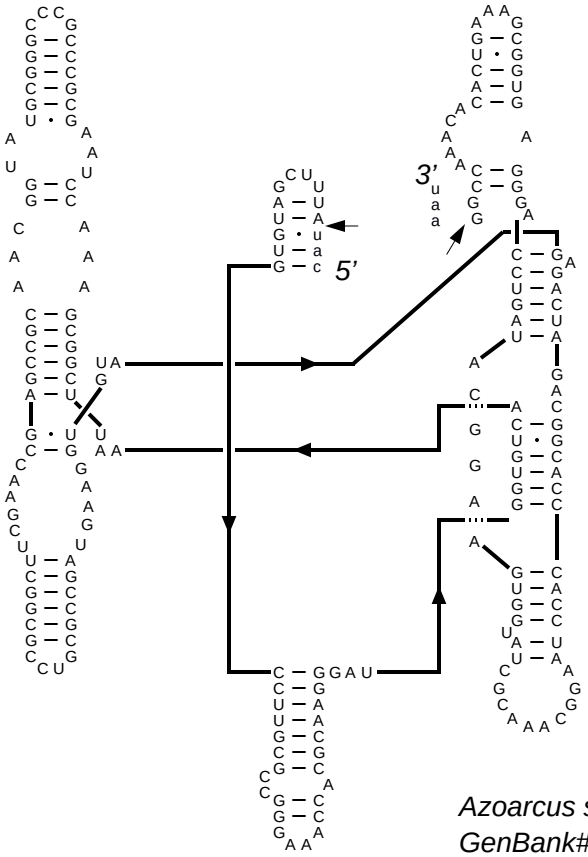


*Azoarcus sp. [Strain BH72] tRNA ile*
*GenBank# X66221*
*(eu)Bacteria, Proteobacteria (IC3)*
*Feb 15, 1995*