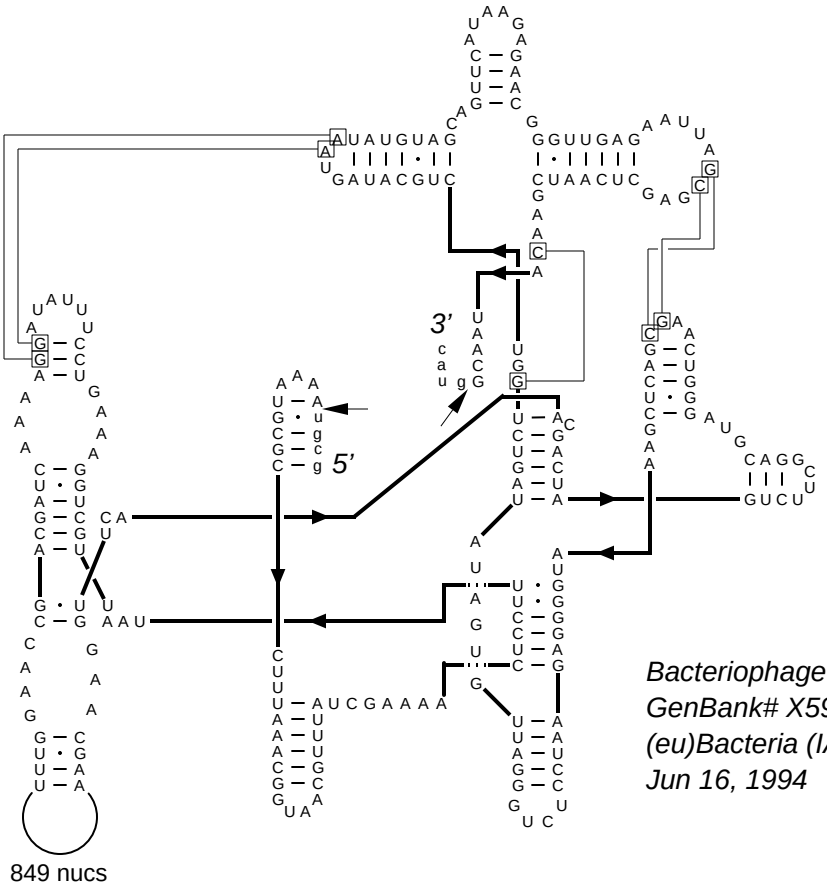

Bacteriophage RB3 nrdB
GenBank# X59078
(eu)Bacteria (IA2)
Jun 16, 1994

Citation and related information available at http://www.rna.ccbb.utexas.edu