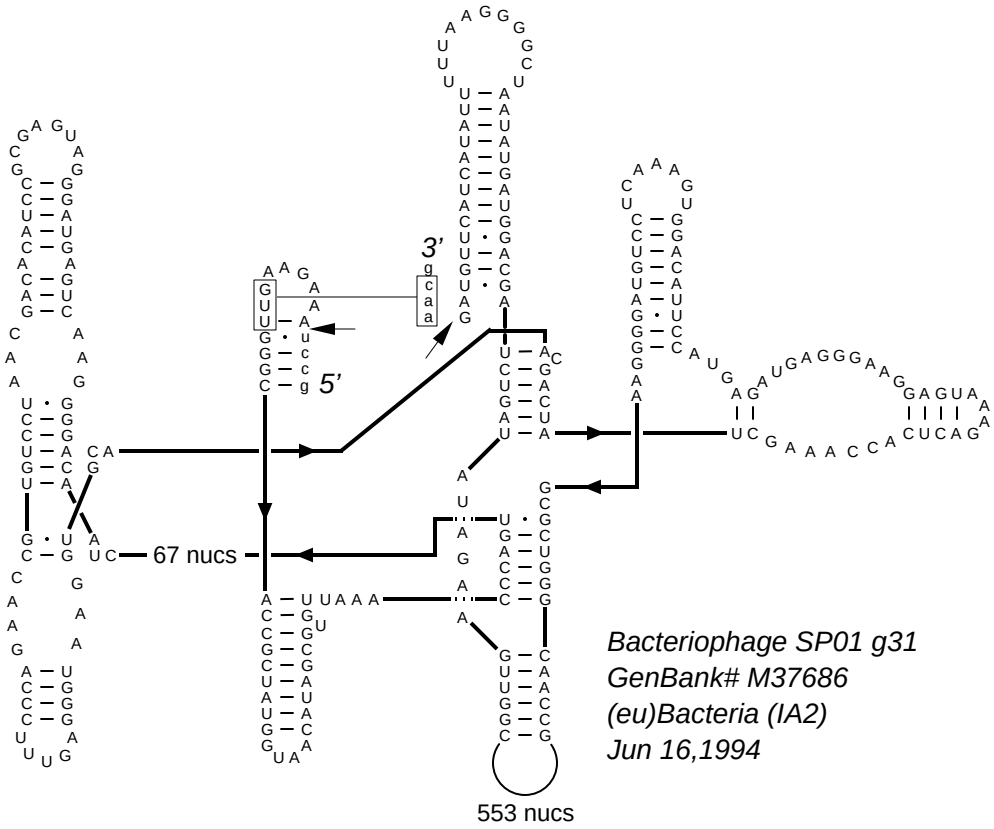

Bacteriophage SP01 g31
GenBank# M37686
(eu)Bacteria (IA2)
Jun 16,1994

Citation and related information available at http://www.rna.ccbb.utexas.edu