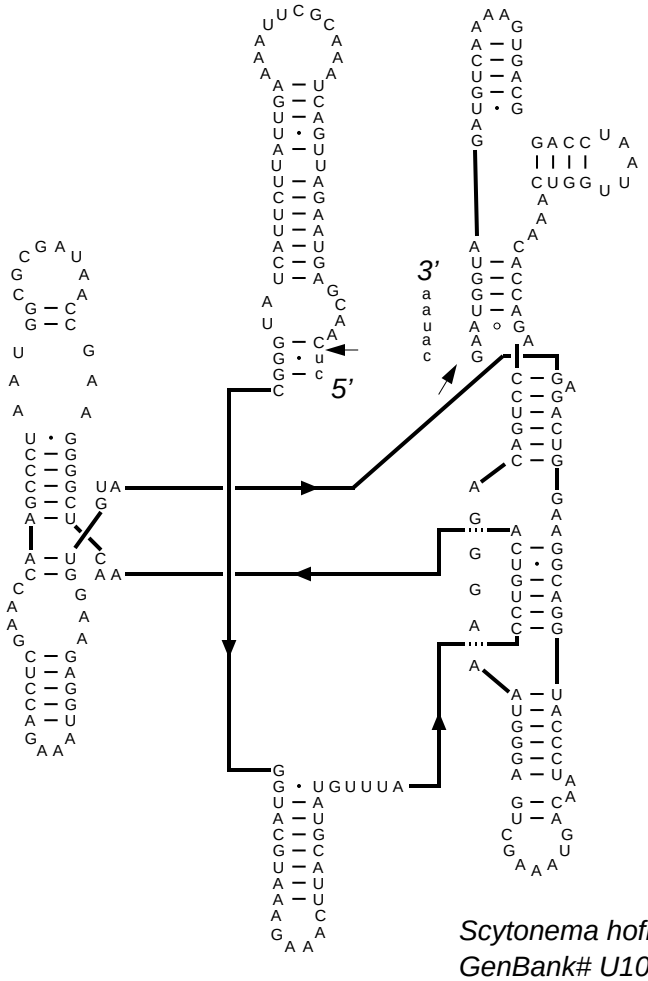

Scytonema hofmanii tRNA met
GenBank# U10481
(eu)Bacteria, Cyanobacteria (IC3)
Feb 15, 1995

Citation and related information available at http://www.rna.ccbb.utexas.edu