Group I intron

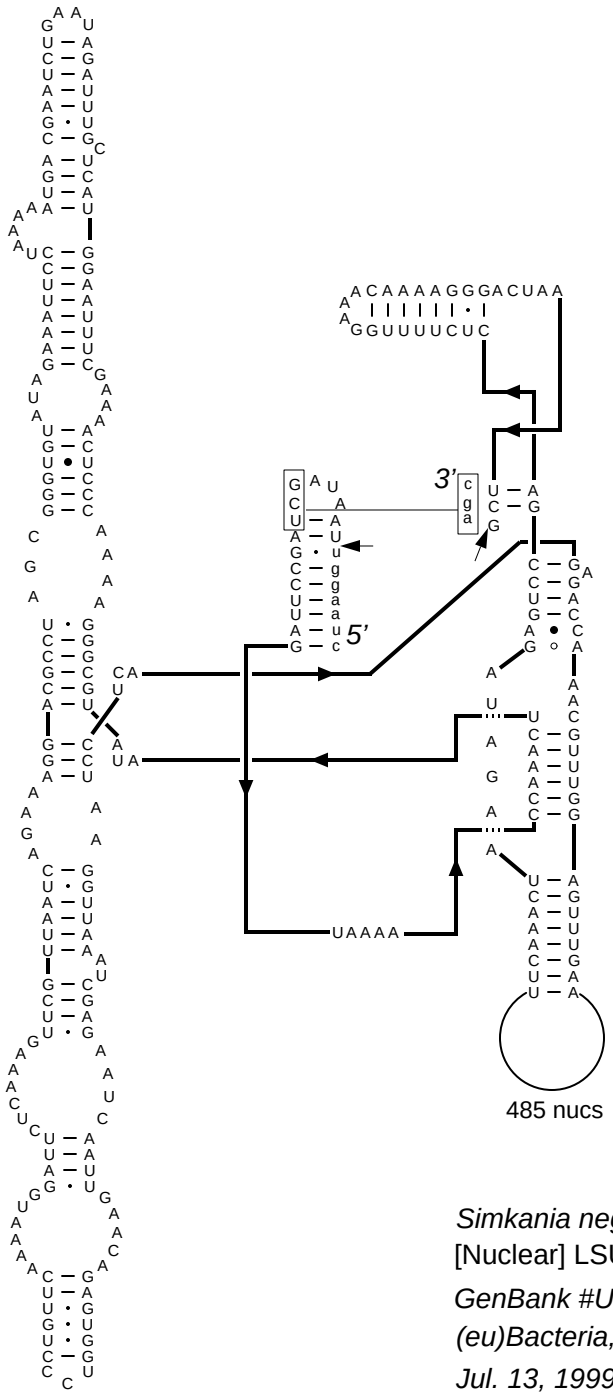

Simkania negevensis
[Nuclear] LSU.1931
GenBank #U68460
(eu)Bacteria, Chlamydia, [IB4]
Jul. 13, 1999