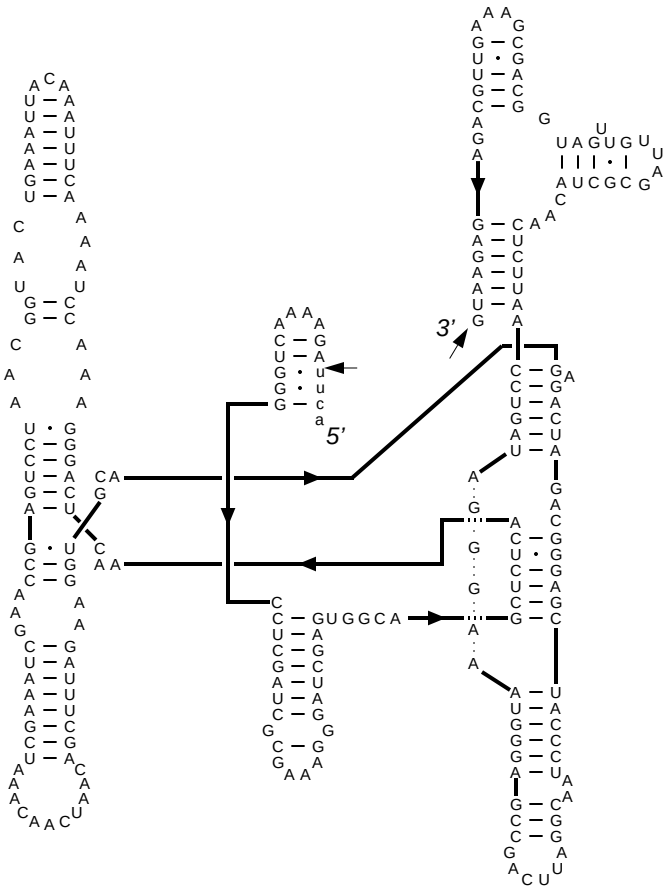

Synechococcus sp. PCC 6301 tRNA leu
GenBank# D42186
(eu)Bacteria, Cyanobacteria (IC3)
Jul 3, 1996

Citation and related information available at http://www.rna.ccbb.utexas.edu