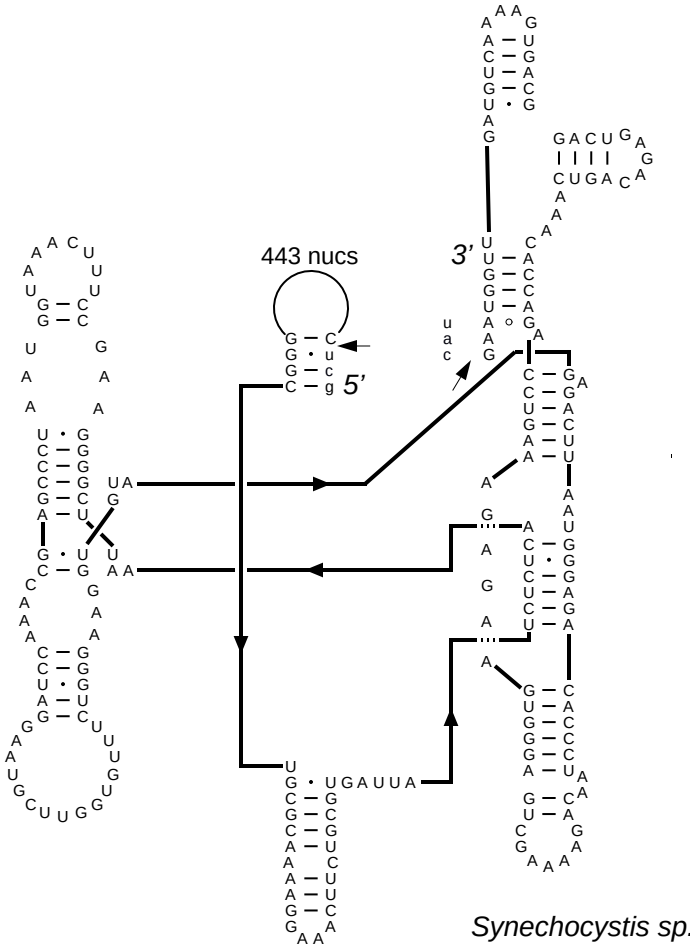

Synechocystis sp. (PCC6803) tRNA met
GenBank# U10482
(eu)Bacteria, Cyanobacteria (IC3)
Feb 15, 1995