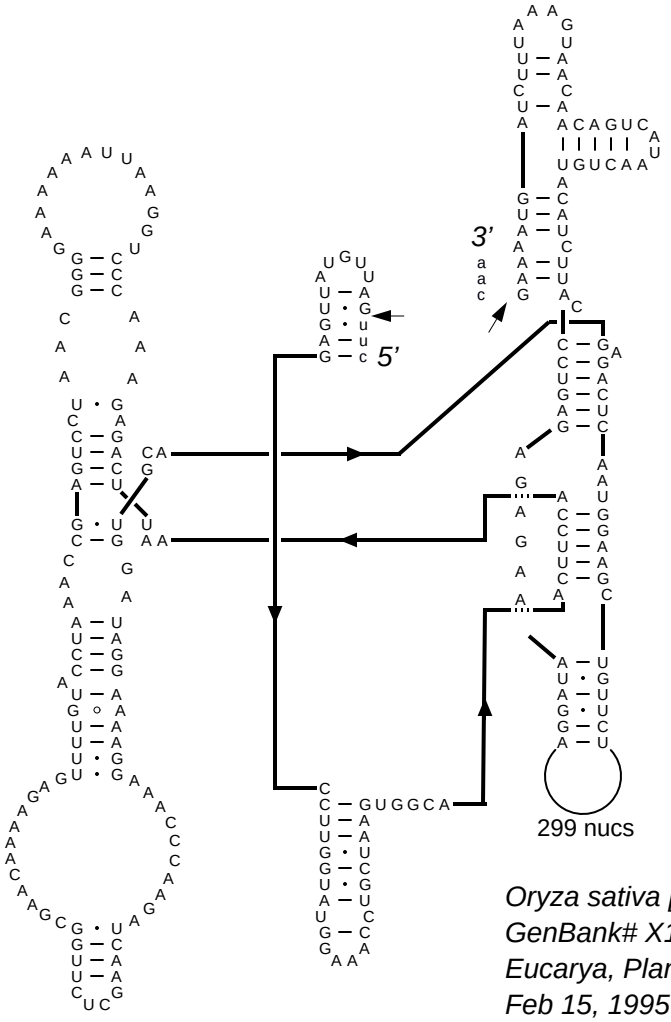


*Oryza sativa [Chloroplast] tRNA leu*
*GenBank# X15901*
*Eucarya, Plantae, Angiospermophyta (IC3)*
*Feb 15, 1995*