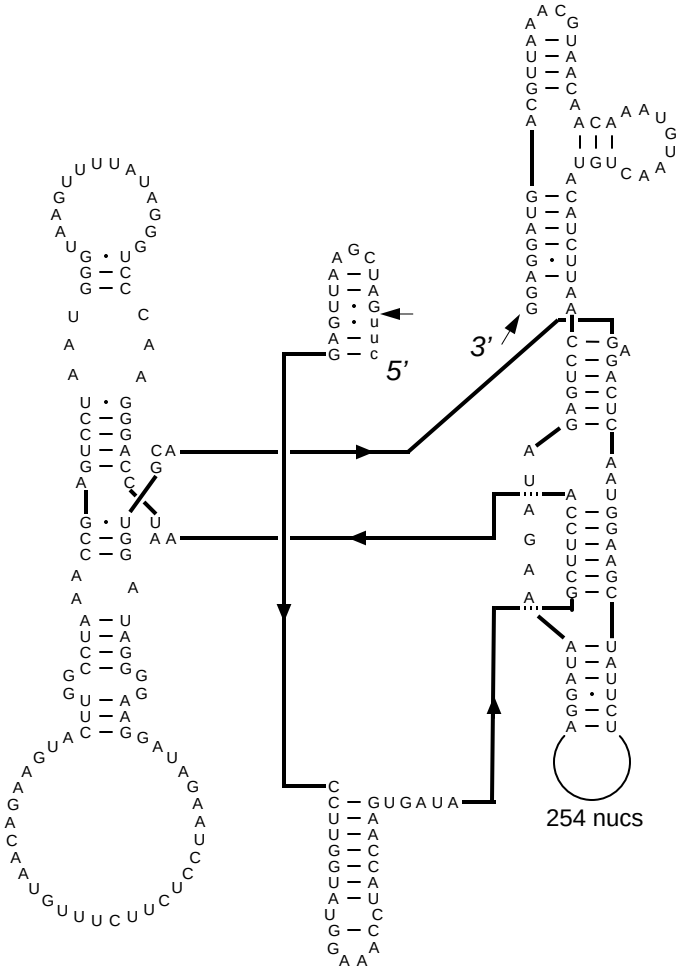

Pinus thunbergii [Chloroplast] tRNA leu
GenBank# D17510
Eucarya, Plantae, Pinophyta (IC3)
Jun 28, 1996

Citation and related information available at http://www.rna.ccbb.utexas.edu