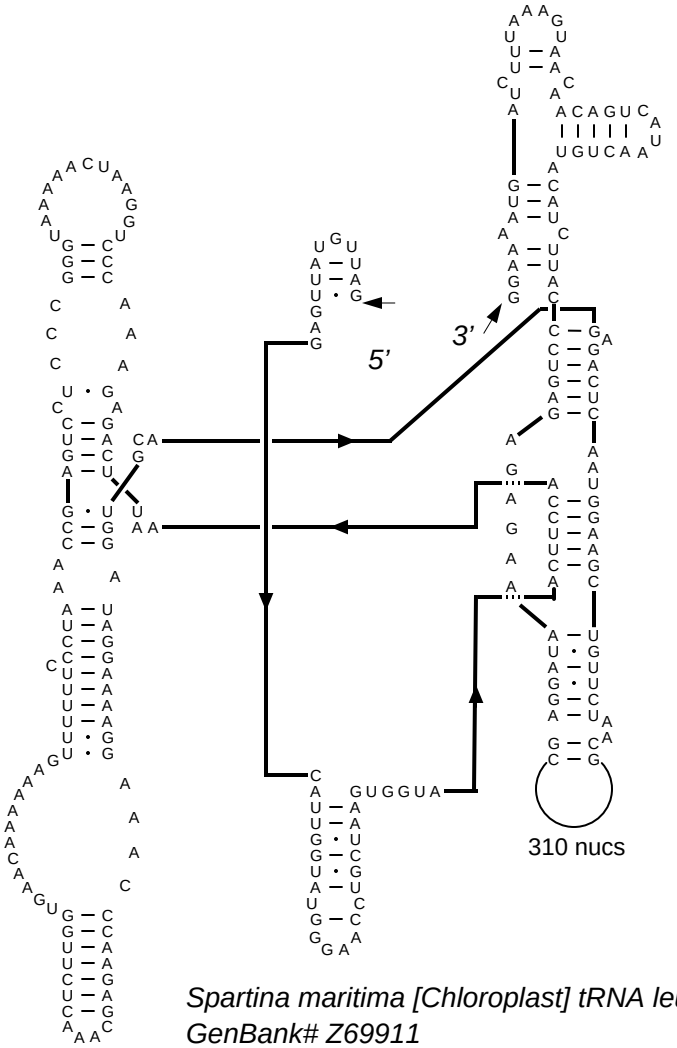

Spartina maritima [Chloroplast] tRNA leu
GenBank# Z69911
Eucarya, Plantae, Magnoliophyta (IC3)
Jun 28, 1996

Citation and related information available at http://www.rna.ccbb.utexas.edu