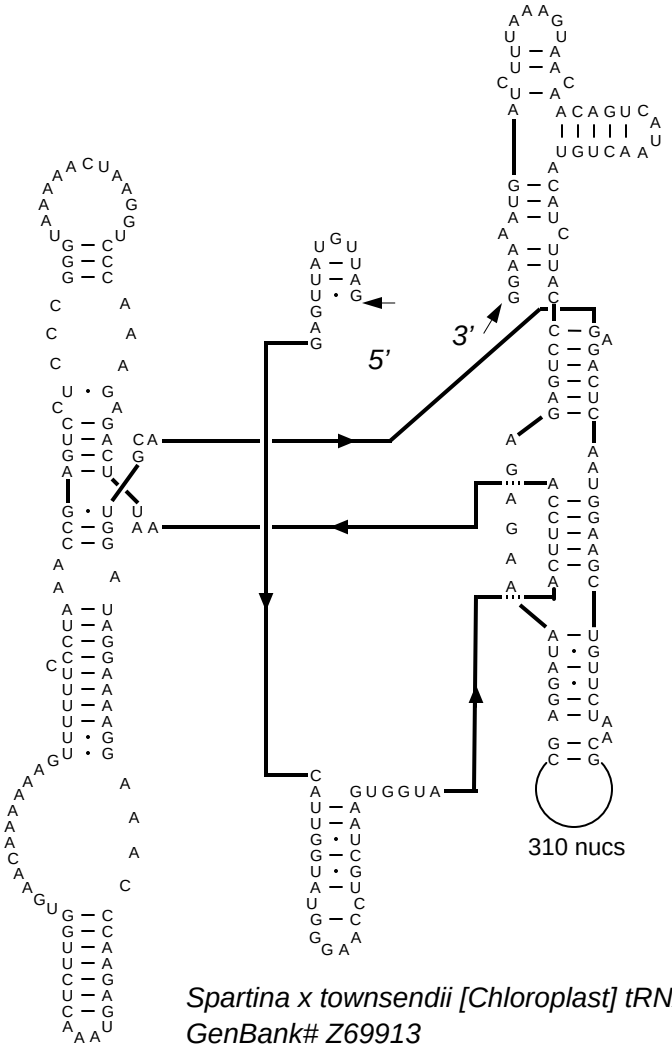

Spartina x townsendii [Chloroplast] tRNA leu
GenBank# Z69913
Eucarya, Plantae, Magnoliophyta (IC3)
Jul 1, 1996

Citation and related information available at http://www.rna.ccbb.utexas.edu