Secondary Structure: Group I intron

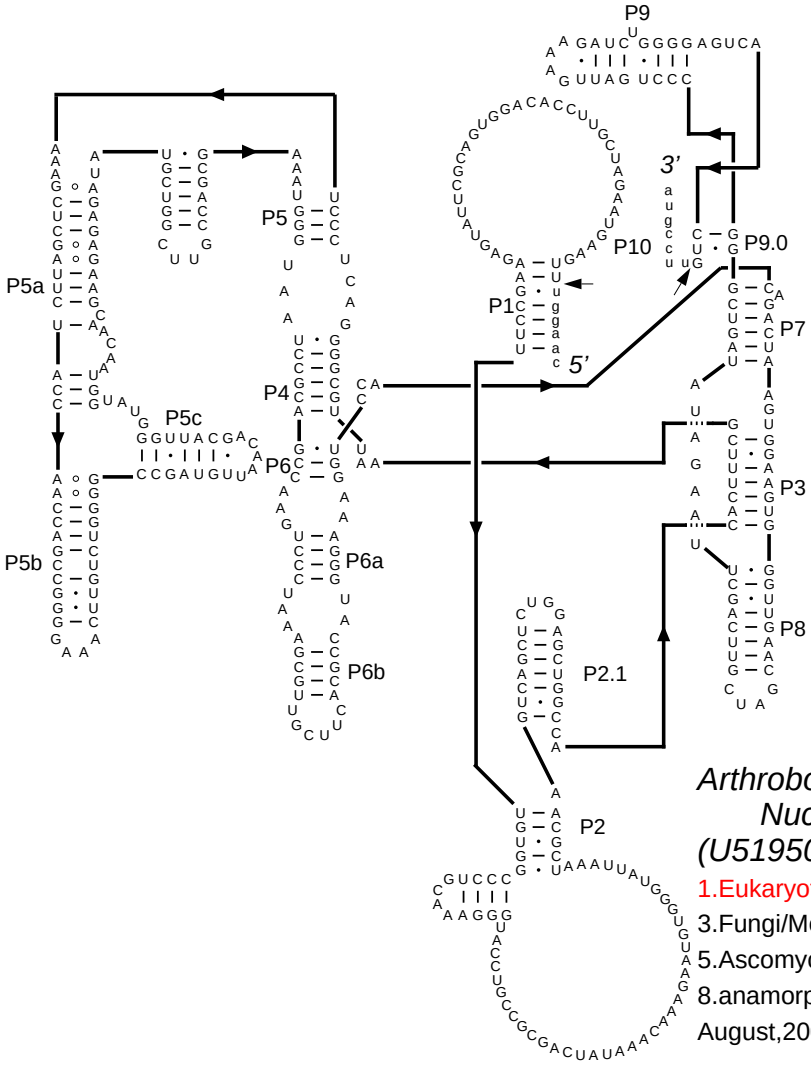

Arthrobotrys brochopaga: Nucleus SSUrRNA (1506,i1) (U51950) (IC1)

1.Eukaryota 2.eukaryote crown group
3.Fungi/Metazoa group 4.Fungi
5.Ascomycota 6.Leotiales 7.Orbiliaceae
8.anamorphic Orbiliaceae 9.Arthrobotrys
August,2000

Citation and related information available at http://www.rna.ccbb.utexas.edu