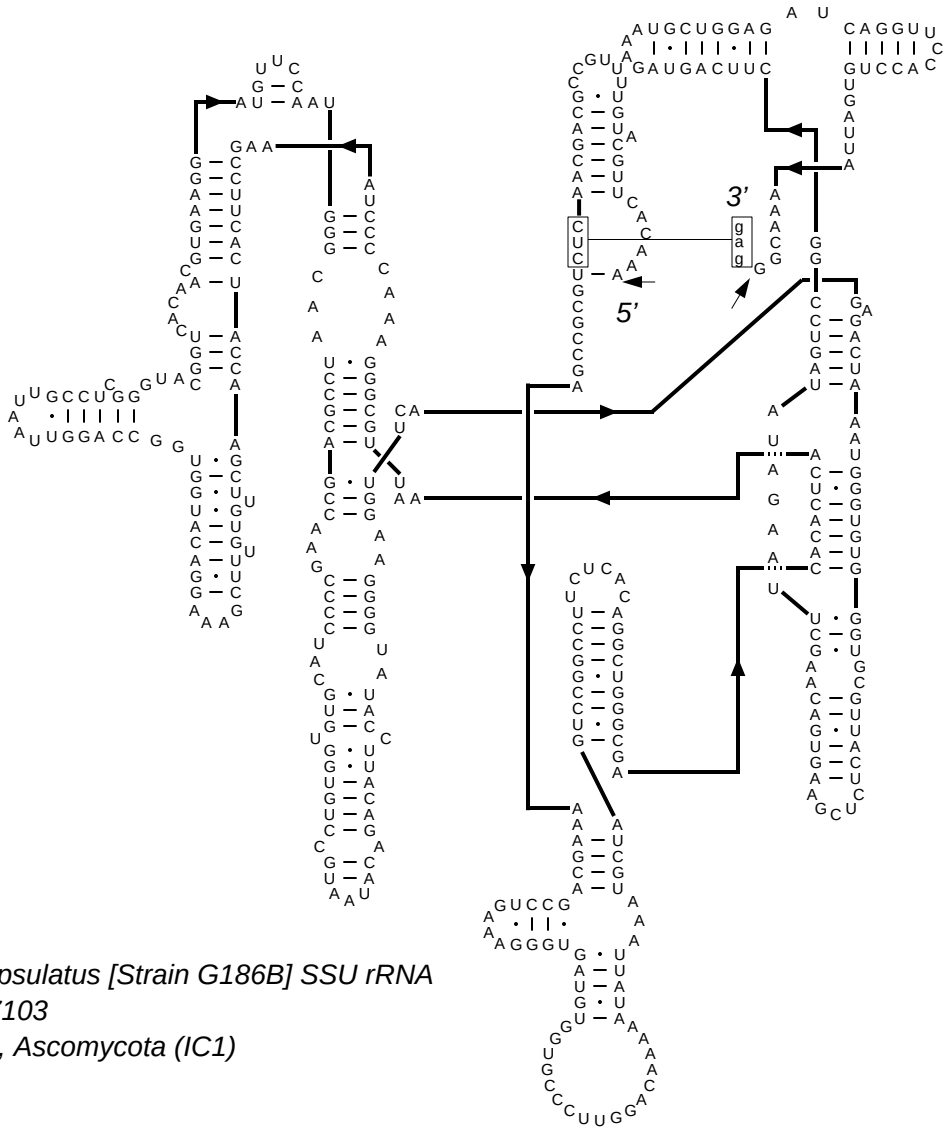

Ajellomyces capsulatus [Strain G186B] SSU rRNA
GenBank# U57103
Eucarya, Fungi, Ascomycota (IC1)
Jul 3, 1996

Citation and related information available at http://www.rna.ccbb.utexas.edu