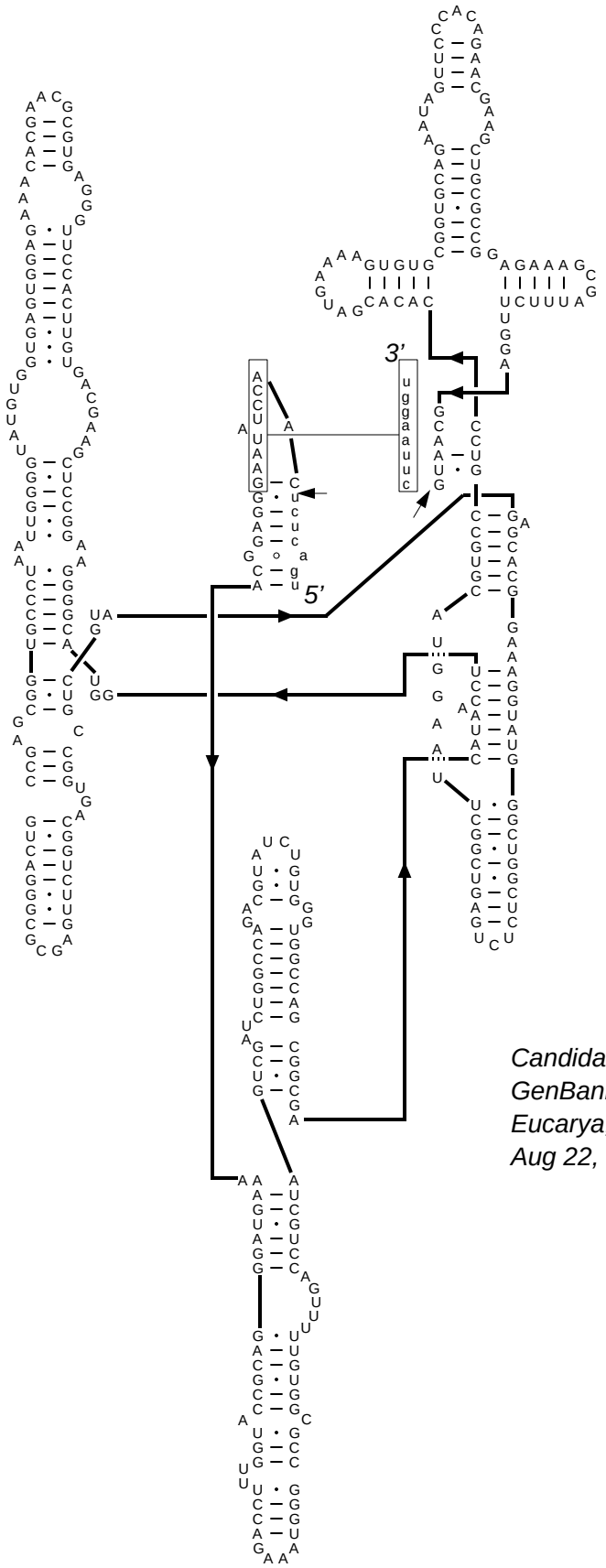

Candida albicans LSU rRNA (1923)
GenBank# X74272
Eucarya, Fungi, Ascomycota (IB3)
Aug 22, 1996