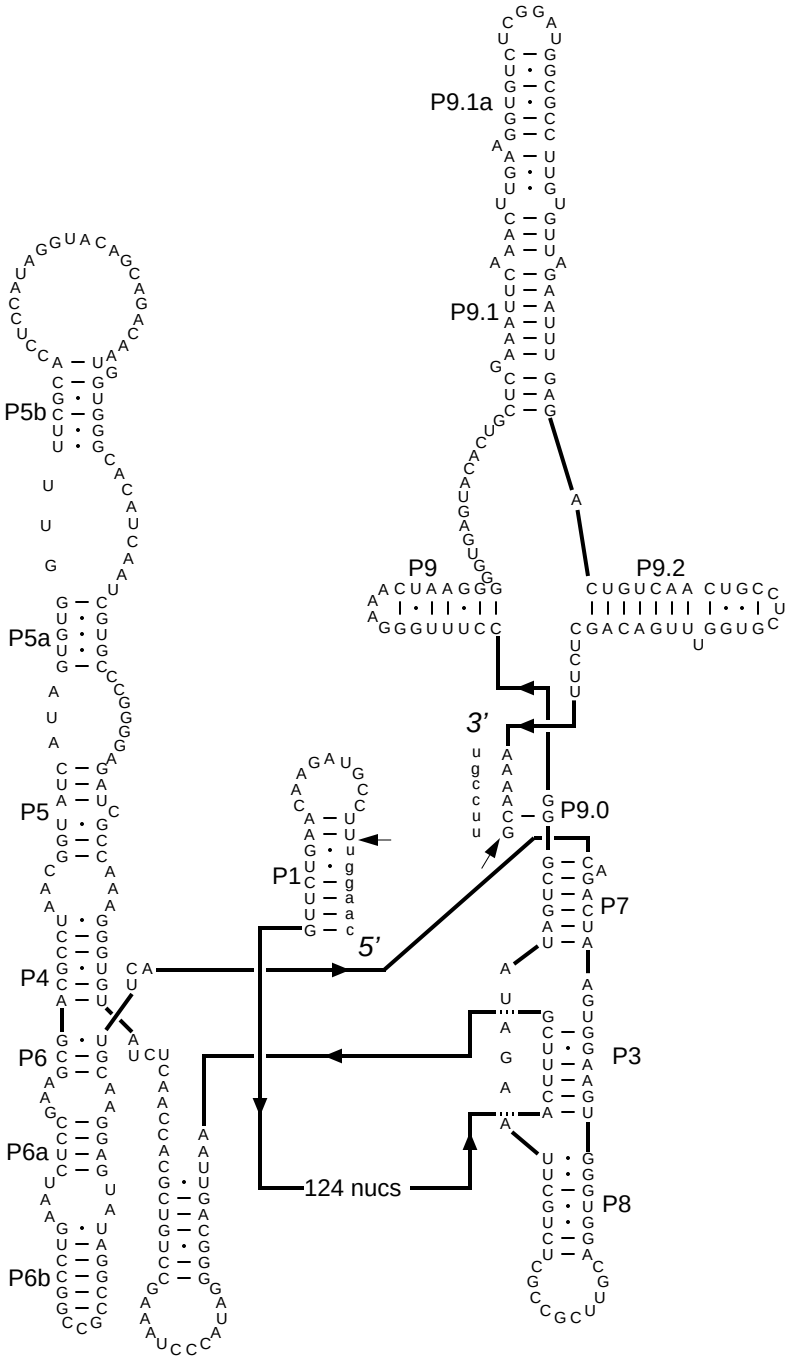

Cenococcum geophilum 155 SSU rRNA (1506)
GenBank# Z48521
Eucarya, Fungi, Ascomycota (UNK)
Aug 20, 1996