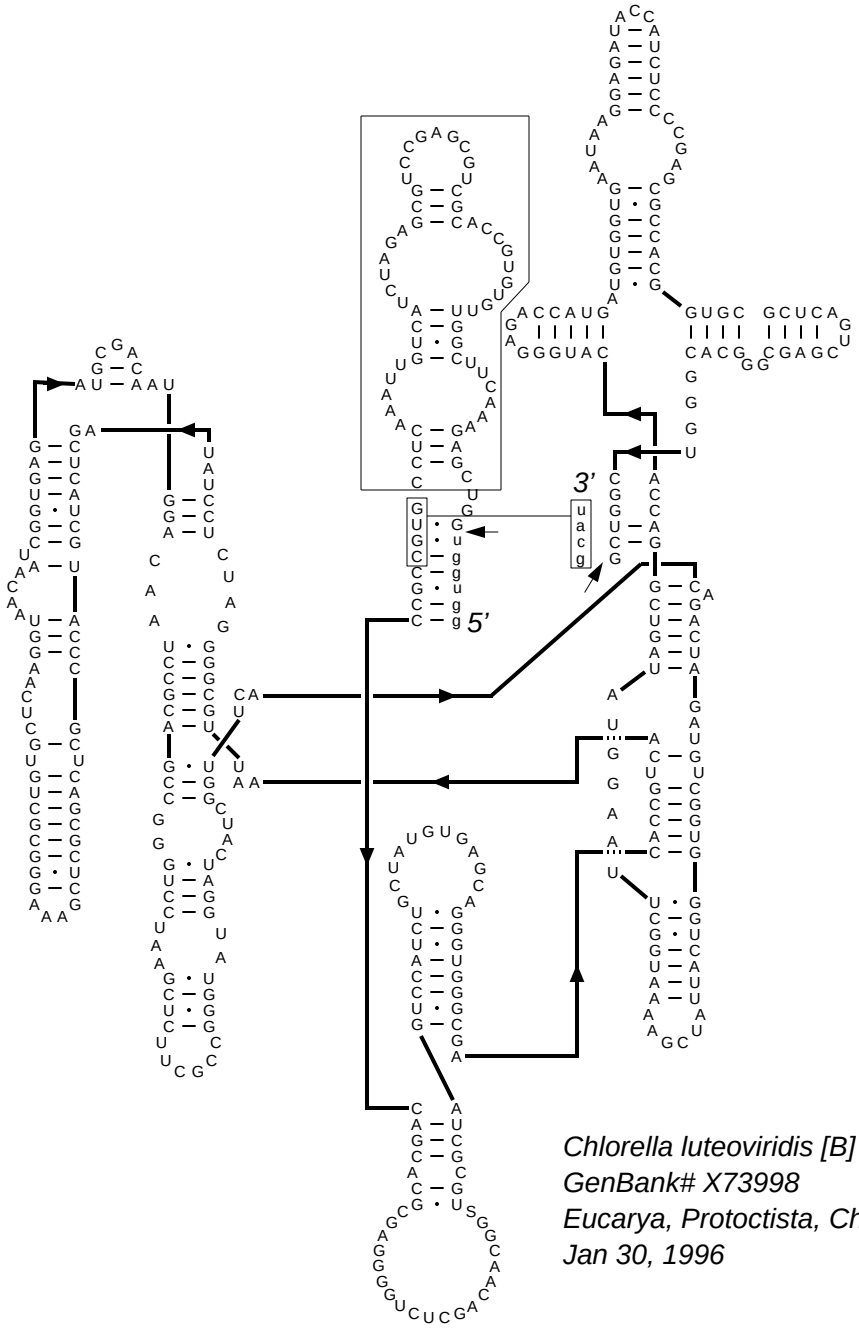

Chlorella luteoviridis [B] SSU rRNA (1052) [i2]
GenBank# X73998
Eucarya, Protoctista, Chlorophyta (IC1)
Jan 30, 1996

Citation and related information available at http://www.rna.ccbb.utexas.edu