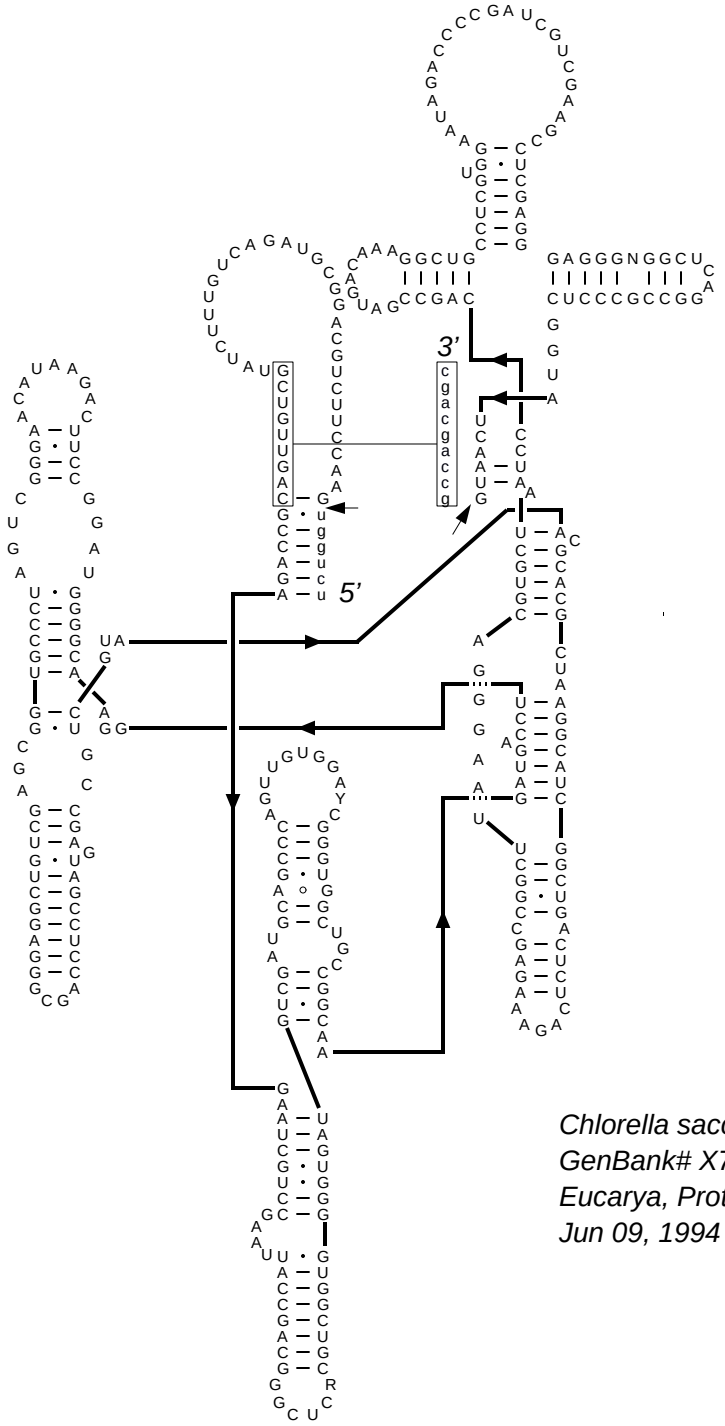

Chlorella saccharophila SSU rRNA
GenBank# X73991
Eucarya, Protoctista, Chlorophyta (IB3)
Jun 09, 1994