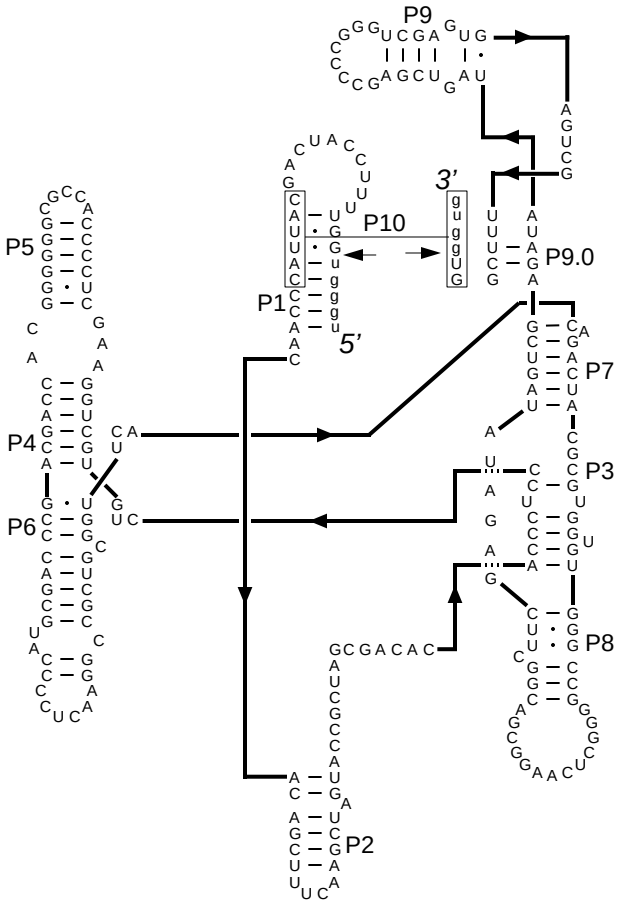

Lecanora dispersa SSU rRNA (1046) [i6]
GenBank# L37734
Eucarya, Fungi, Ascomycota (UNK)
Jul 23, 1996

Citation and related information available at http://www.rna.ccbb.utexas.edu