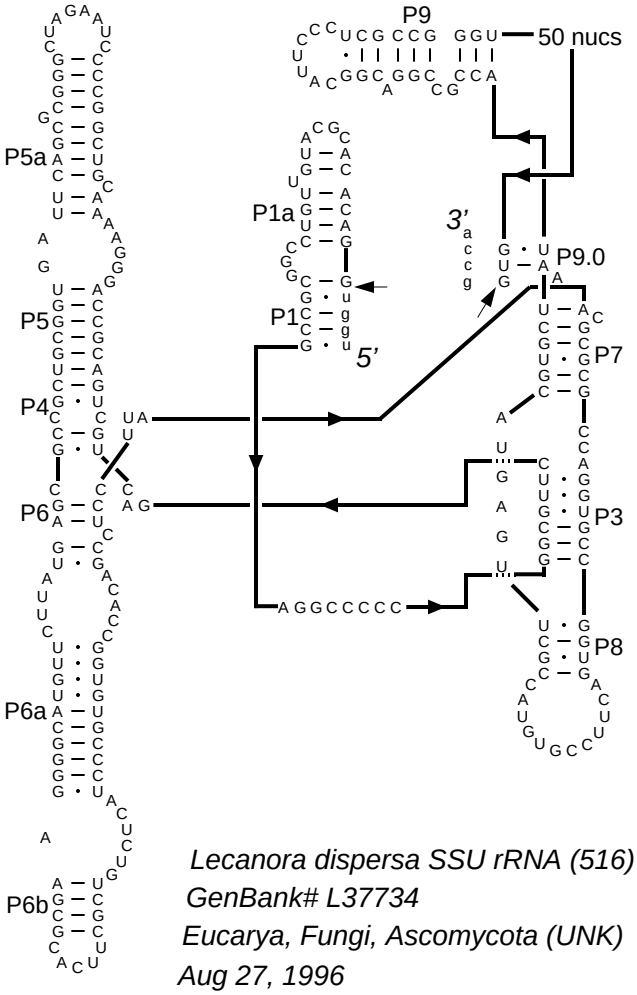


*Lecanora dispersa SSU rRNA (516) [i3]*
*GenBank# L37734*
*Eucarya, Fungi, Ascomycota (UNK)*
*Aug 27, 1996*

**Citation and related information available at http://www.rna.ccbb.utexas.edu**