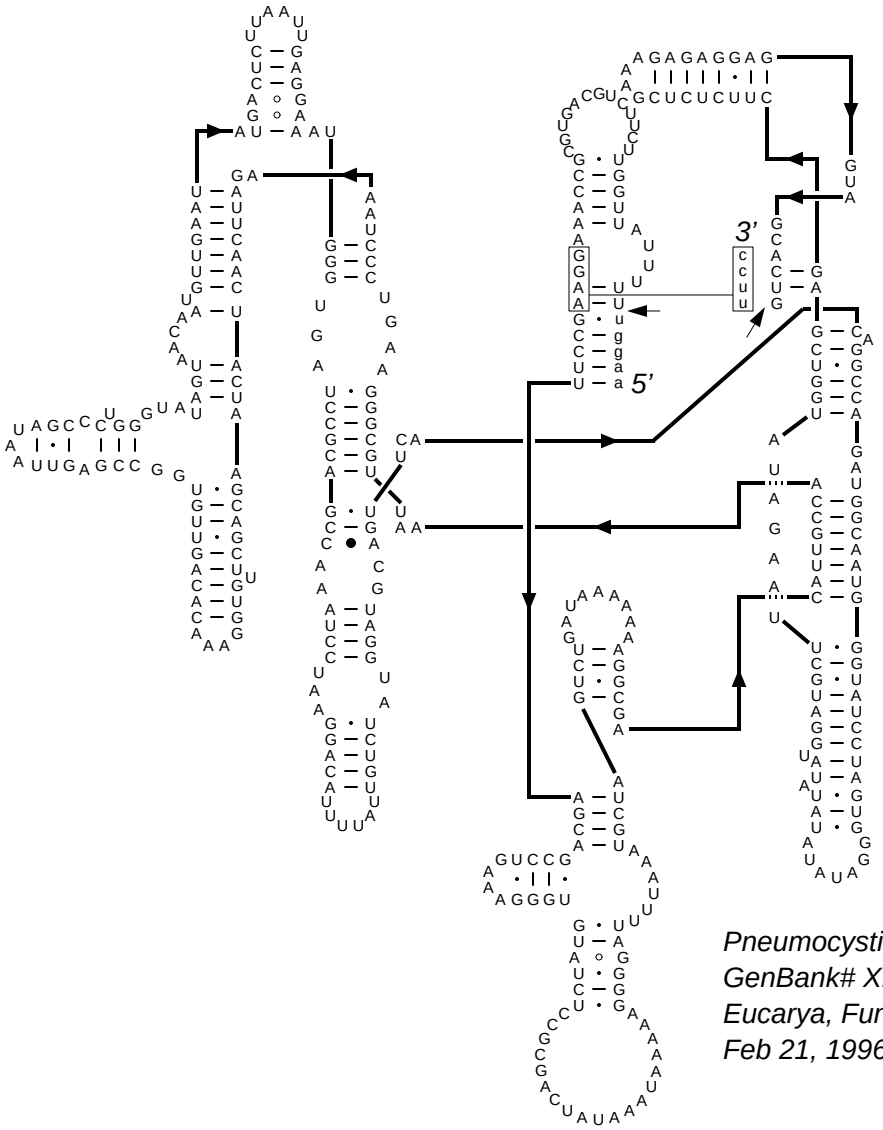

Pneumocystis carinii SSU rRNA (1506)
GenBank# X13687
Eucarya, Fungi, Ascomycota (IC1)
Feb 21, 1996

Citation and related information available at http://www.rna.ccbb.utexas.edu