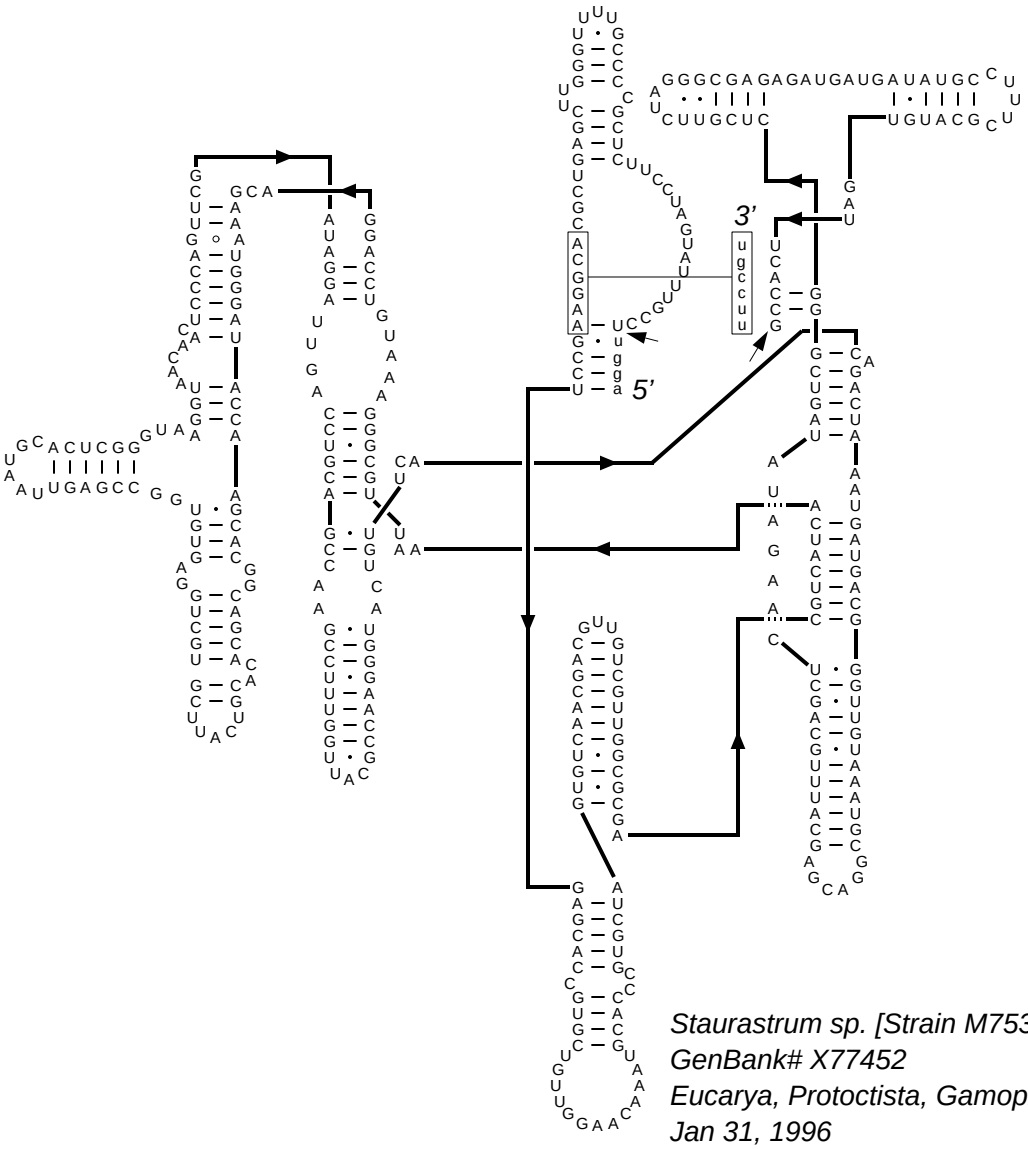

Staurastrum sp. [Strain M753] SSU rRNA (1506)
GenBank# X77452
Eucarya, Protoctista, Gamophyta (IC1)
Jan 31, 1996

Citation and related information available at http://www.rna.ccbb.utexas.edu