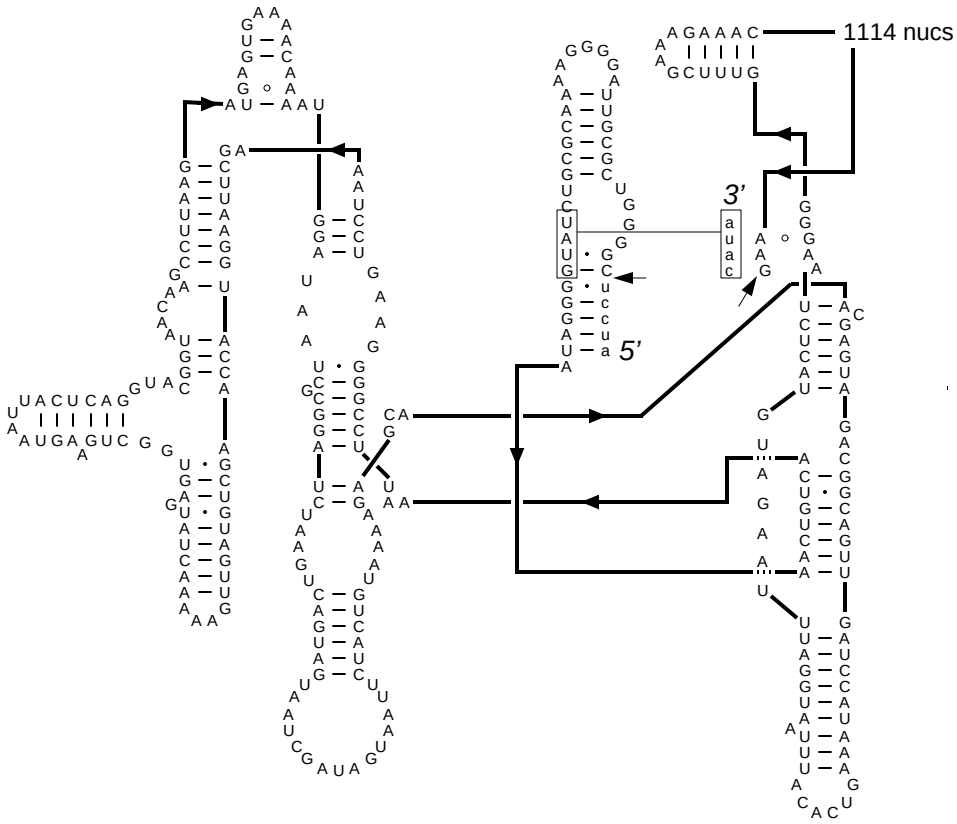

Neurospora crassa [Mitochondrion] ND5 [i1]
GenBank# X05115
Eucarya, Fungi, Ascomycota (IC2)
Jun 09, 1994