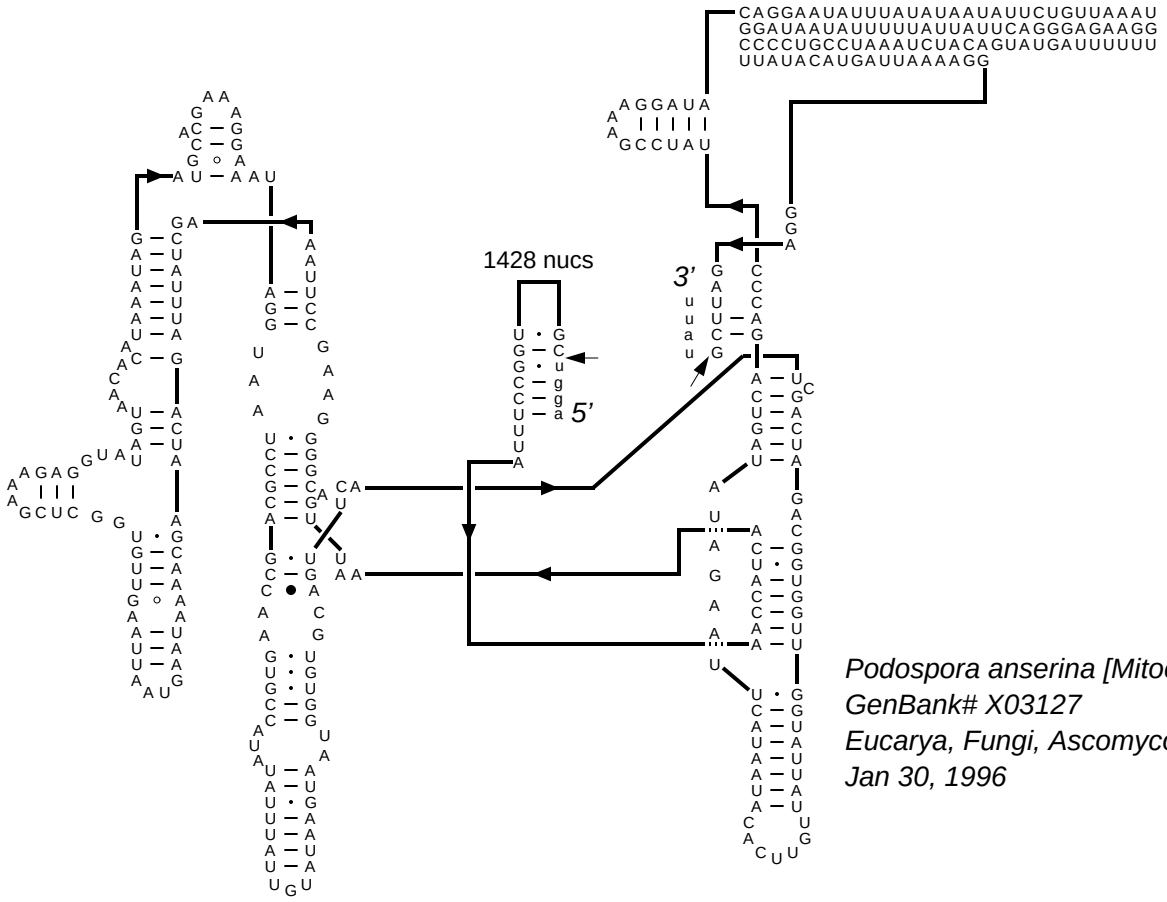

Podospora anserina [Mitochondrion] ND1 [i1]
GenBank# X03127
Eucarya, Fungi, Ascomycota (IC1)
Jan 30, 1996

Citation and related information available at http://www.rna.ccbb.utexas.edu