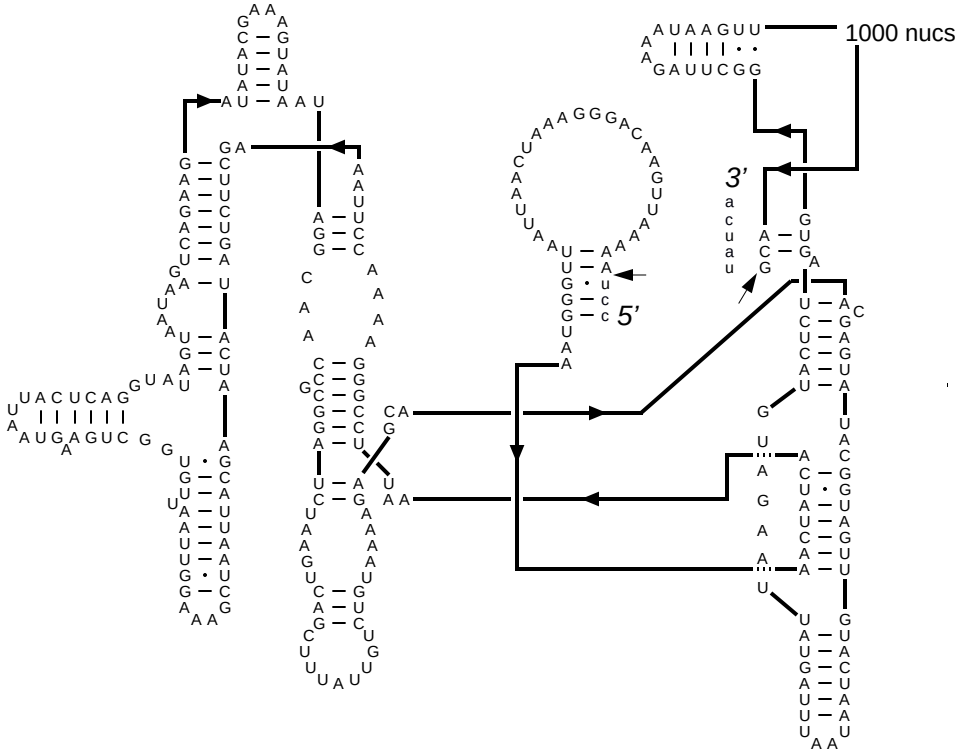

Podospora anserina [Mitochondrion] ND3
GenBank# X55026
Eucarya, Fungi, Ascomycota (IC2)
Jun 16, 1994