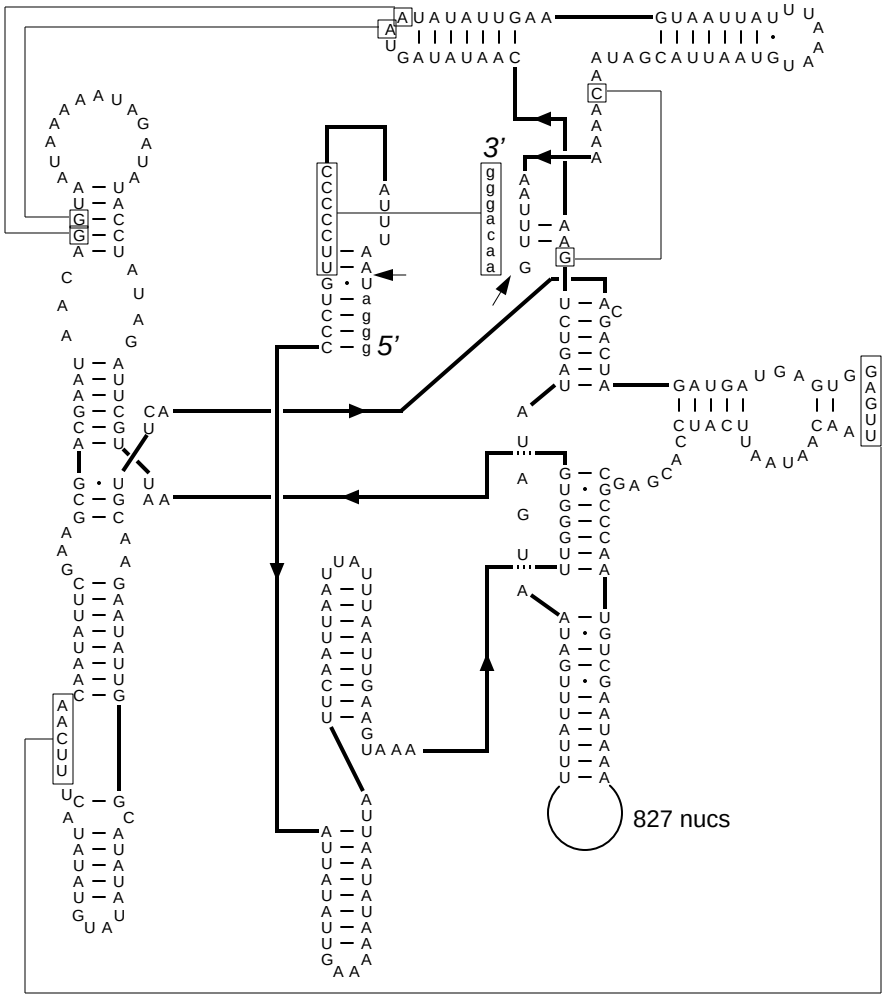

Saccharomyces cerevisiae [Mitochondrion] LSU rRNA
GenBank# X00149
Eucarya, Fungi, Ascomycota (IA1)
Feb 14,1996

Citation and related information available at http://www.rna.ccbb.utexas.edu