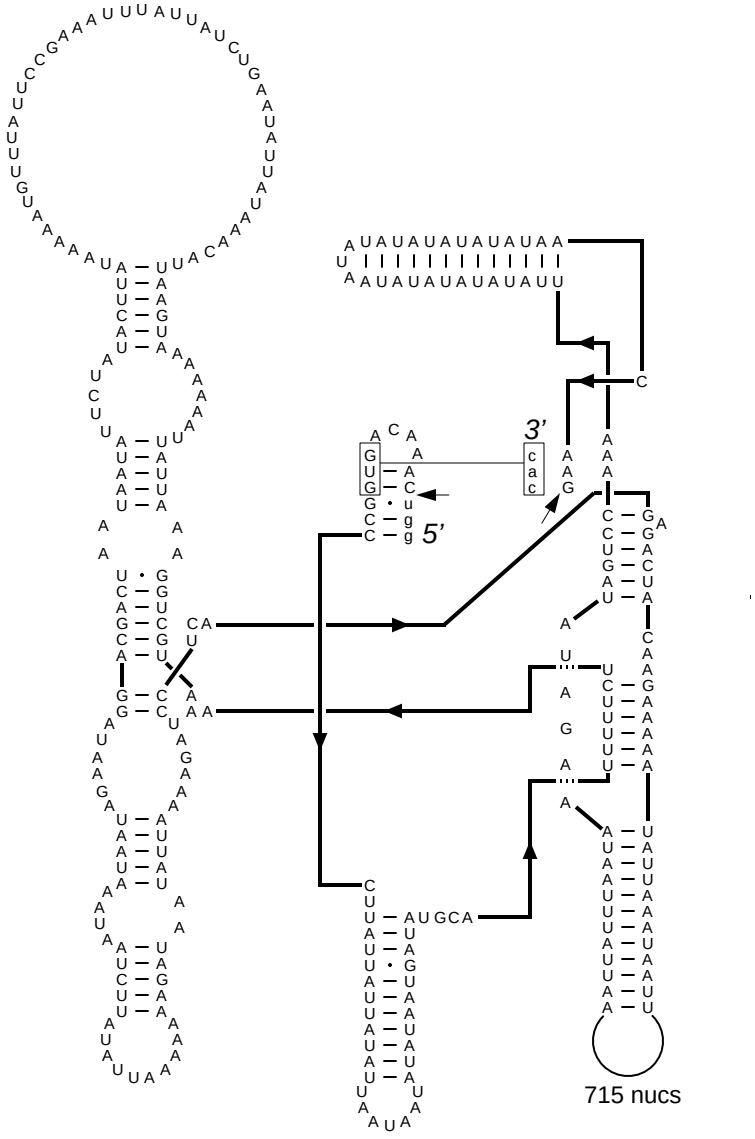

Saccharomyces cerevisiae [Mitochondria] OX1 [i4]
GenBank# J01481
Eucarya, Fungi, Ascomycota (IB1)
Jun 15, 1994