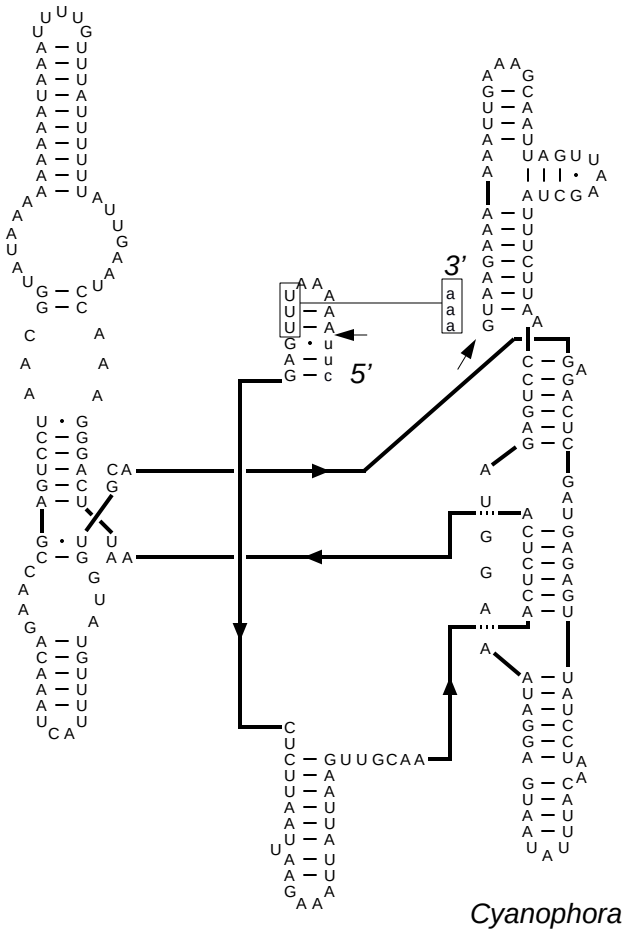

Cyanophora paradoxa [Cyanelle] tRNA leu
GenBank# M22563
Eucarya, Protoctista, Cryptophyta (IC3)
Feb 15, 1995