Secondary Structure: Group I intron

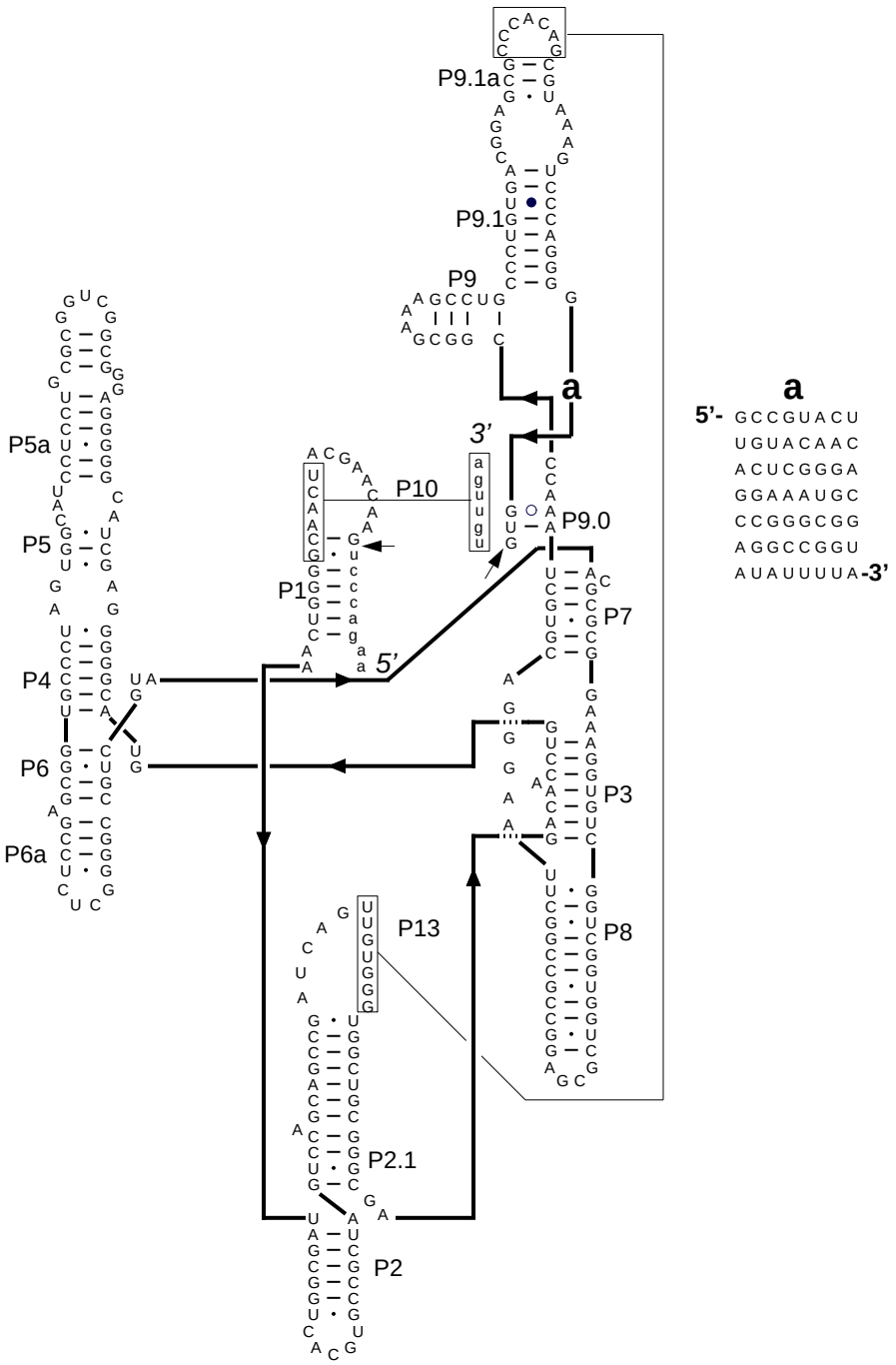

Metarhizium anisopliae var. anisopliae: Nuclear LSU rRNA [i1, 2066]

(AF197121) (IE)

1.cellular organisms 2.Eukaryota 3.eukaryote crown group
4.Fungi/Metazoa group 5.Fungi 6.Ascomycota
7.anamorphic Ascomycota 8.Metarhizium
9.Metarhizium anisopliae
May 2001

Citation and related information available at http://www.rna.ccbb.utexas.edu