Secondary and Tertiary Interactions and Basepair Conformations in 5S rRNA

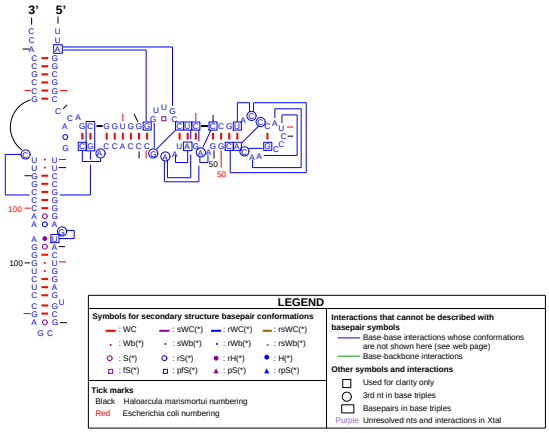

Haloarcula marismortui
(AF034620)
1.Archaea 2.Euryarchaeota
3.Halobacteriales 4.Halobacteriaceae 5.Haloarcula
Model Version: December 2001
Last Modified: August 16, 2005