Secondary Structure: 5S Ribosomal RNA Comparative/Crystal Structure Comparison

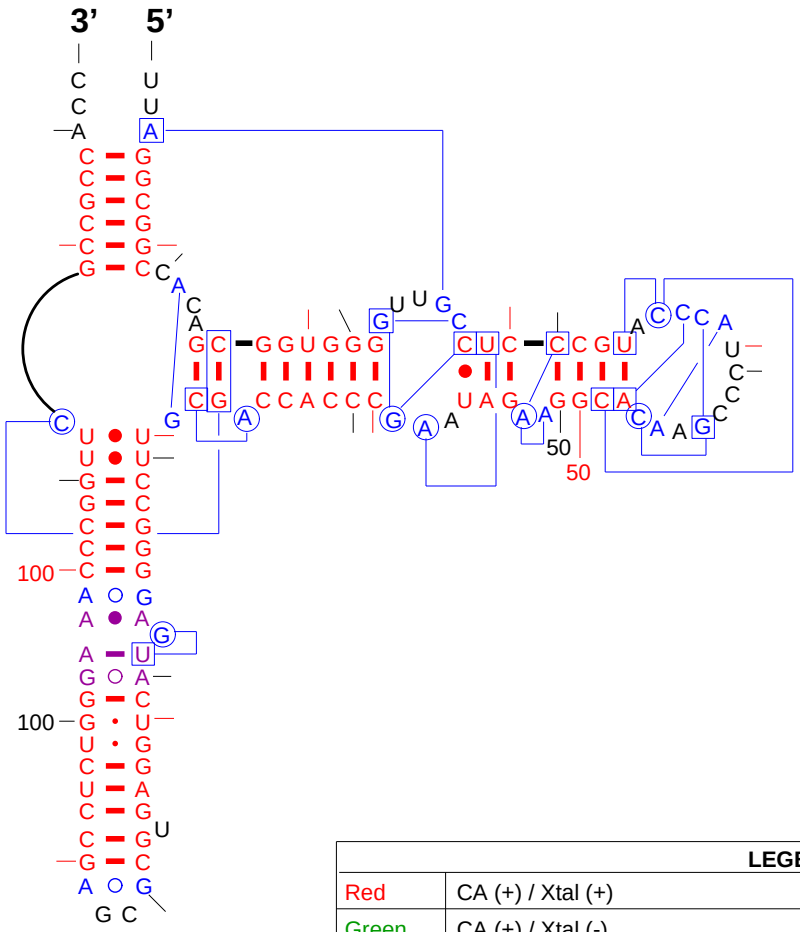

LEGEND		
Red	CA (+) / Xtal (+)	**Colored open squares** - Used for clarity
Green	CA (+) / Xtal (-)	
Blue	CA (-) / Xtal (+)	
Magenta	CA (+) / Xtal (+) in Motifs & Tentatives	**Colored open circles** - 3rd nt in base triples
Brown	Base-backbone or backbone-backbone	
Black tick	Haloarcula marismortui numbering	**Colored open rectangles** - Basepairs in base triples
Red tick	Escherichia coli numbering	

Haloarcula marismortui
(AF034620)
1.Archaea 2.Euryarchaeota
3.Halobacteriales 4.Halobacteriaceae 5.Haloarcula
Model Version: December 2001
Last Modified: October 25, 2002