Secondary Structure: Group I intron

1T42: Peter L. Adams, et al. Nature 430, 45-50 (2004)

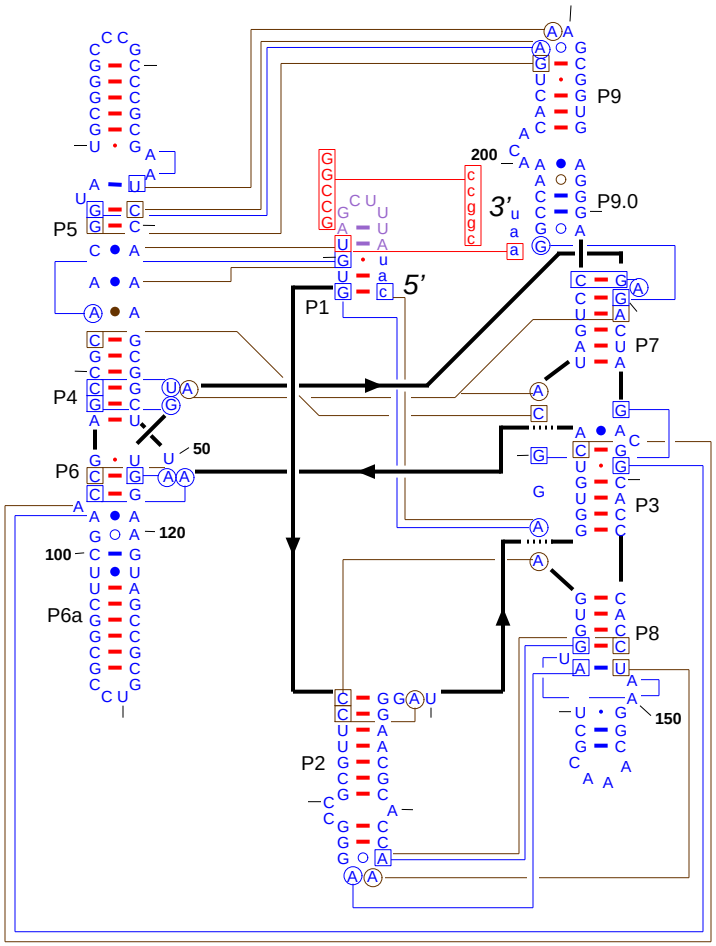

Azoarcus sp. [Strain BH72] tRNA-Ile (CAU)

(X66221) (IC3)

1.Bacteria 2.Proteobacteria 3.Betaproteobacteria

4.Rhodocyclales 5.Rhodocyclaceae 6.Azoarcus

Model: February 15, 1995

Last modified: September 16, 2005

Citation and related information available at http://www.rna.icmb.utexas.edu