Secondary Structure: Group I intron

1GID: Cate et al, Science 273, 1678 (1996)
1GRZ: Golden et al, Science 282, 259 (1998)
1HR2: Juneau et al, Structure 9, 221 (2001)
1X8W: Feng et al, Mol. Cell 16, 351 (2004)

1GID (2.50 A)	1GRZ (5.00 A)	1HR2 (2.55 A)
G103:C217: WC	U322C	U106:G215: WC
A104:C216: WC	U323A	U106:U259
A105:G215: WC	U326G	U107:C260
U107:U259: H	G215:U258: WC	No A218:A219: AP
G108:C260: H	C216:G257: Wb	
	A217:A256: rH	
	A103:U271: WC	
	C109:C260	
	No U107:U259	

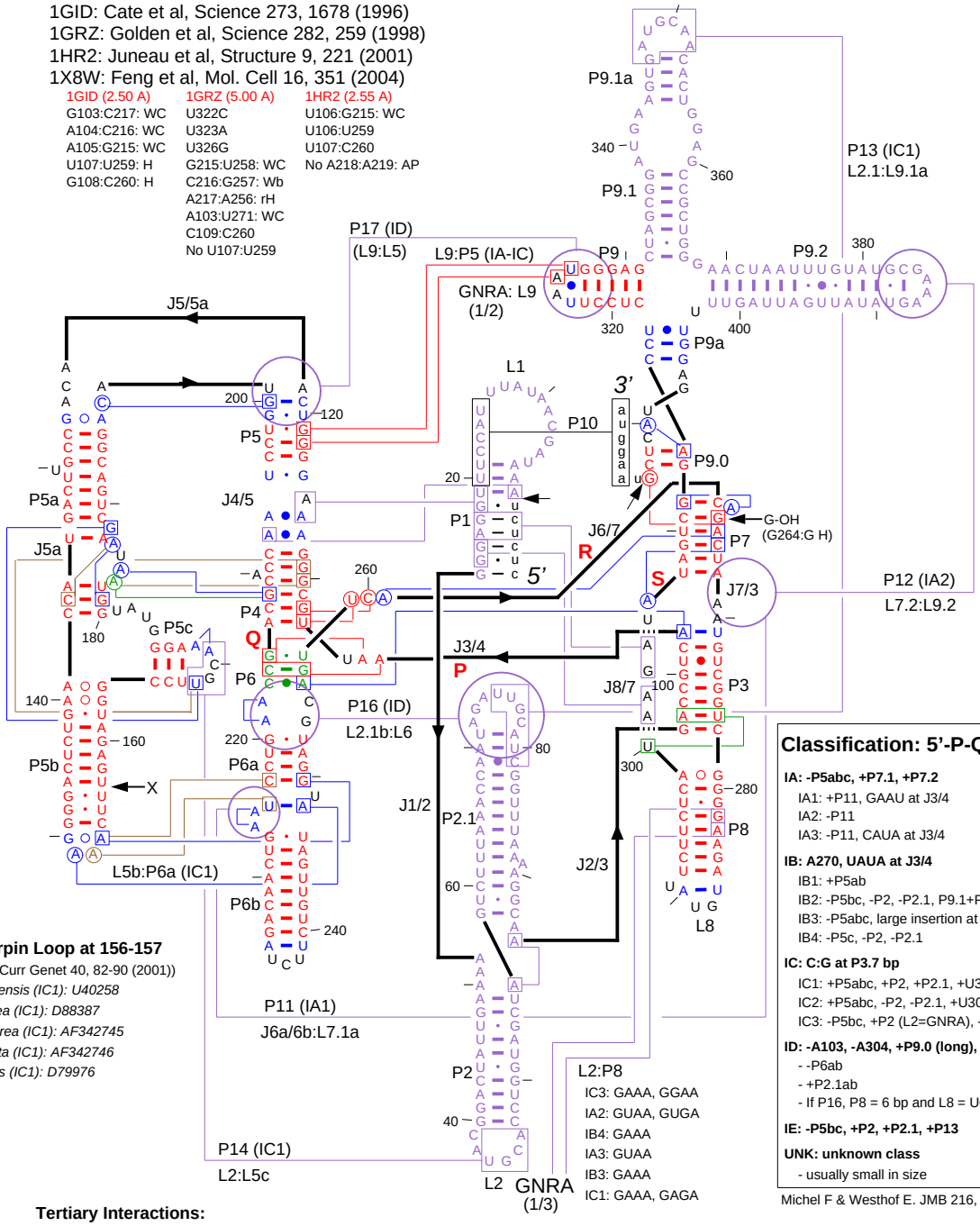

X: Inserted Hairpin Loop at 156-157
(Bhattacharya et al. Curr Genet 40, 82-90 (2001))
Aureoumbra lagunensis (IC1): U40258
Bangia atropurpurea (IC1): D88387
Bangia fuscopurpurea (IC1): AF342745
Porphyra leucosticta (IC1): AF342746
Porphyra yezoensis (IC1): D79976

Classification: 5'-P-Q-R-S-3'

IA: -P5abc, +P7.1, +P7.2
IA1: +P11, GAAU at J3/4
IA2: -P11
IA3: -P11, CAUA at J3/4

IB: A270, UAUA at J3/4
IB1: +P5ab
IB2: -P5bc, -P2, -P2.1, P9.1+P9.2
IB3: -P5abc, large insertion at J3/4
IB4: -P5c, -P2, -P2.1

IC: C:G at P3.7 bp
IC1: +P5abc, +P2, +P2.1, +U300
IC2: +P5abc, -P2, -P2.1, +U300
IC3: -P5bc, +P2 (L2=GNRA), -P2.1, -U300

ID: -A103, -A304, +P9.0 (long), +P16
- -P6ab
- +P2.1ab
- If P16, P8 = 6 bp and L8 = UGNAAU

IE: -P5bc, +P2, +P2.1, +P13

UNK: unknown class
- usually small in size

Michel F & Westhof E. JMB 216, 585-610 (1990)

Tertiary Interactions:
J5a:P4 ((C109:G212)A183):: Flor et al. EMBO J 8, 3391-3399 (1989)
P11:: Jaeger L, Westhof E, Michel F. JMB 221, 1153-1164 (1991)
P12:: Jaeger L, Westhof E, Michel F. JMB 234, 331-346 (1993)
P13+P14+P16:: Lehnert V et al. Chem & Biol 3, 993-1009 (1996)
P17:: Jaeger L, Westhof E, Michel F. Biochimie 78, 466-473 (1996)
L5b:P6a ((C223:G250)A153):: Murphy FL & Cech TR. JMB 236, 49-63 (1994)
L9:P5:: Jaeger L, Westhof E, Michel F. JMB 236, 1271-1276 (1994)
L2:P8:: Costa M & Michel F. EMBO J 14, 1276-1285 (1995)
J8/7:P1:: Pyle et al. Nature 358, 123-128 (1992)
A57:A95:: Downs WD & Cech TR. Gene & Dev 8, 1198-1211 (1994)

Tetrahymena thermophila: Nuclear LSU rRNA [i1, 1925]

(V01416 J01235) (IC1)

1.Eukaryota 2.Alveolata 3.Ciliophora 4.Oligohymenophorea
5.Hymenostomatida 6.Tetrahymenina 7.Tetrahymena
Last Modified: April 30, 2004

Citation and related information available at http://www.rna.icmb.utexas.edu