Secondary Structure: Group II Intron RNA

3BWP (3.10 A): Toor, N. et al, Science 320, 77-82(2008)
3G78 (2.80 A): Wang, J., Acta Cryst. D66, 988-1000(2010)

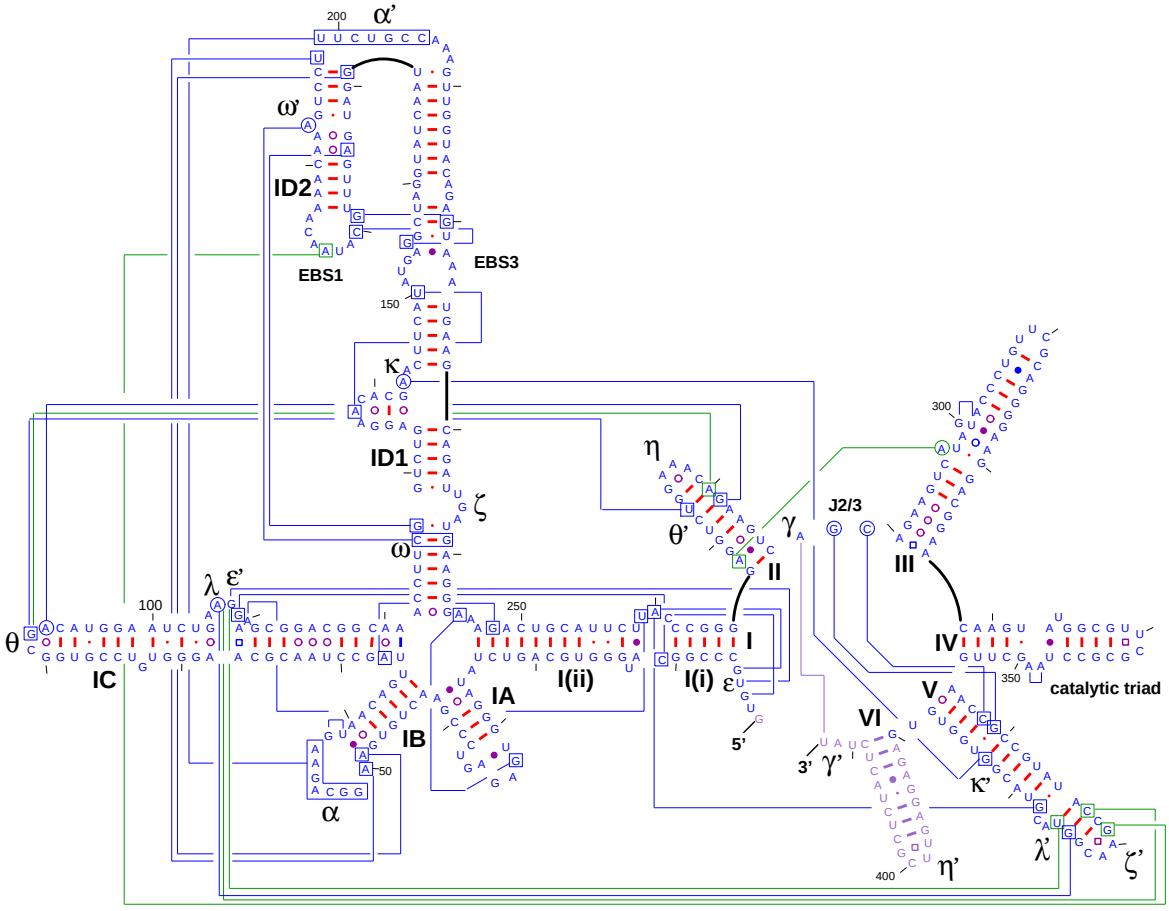

Oceanobacillus iheyensis HTE831
(BA000028) (PDB 3G78)
1.Bacteria 2.Firmicutes
3.Bacillales 4.Bacillaceae 5.Oceanobacillus
July 12, 2011