Fig. 3

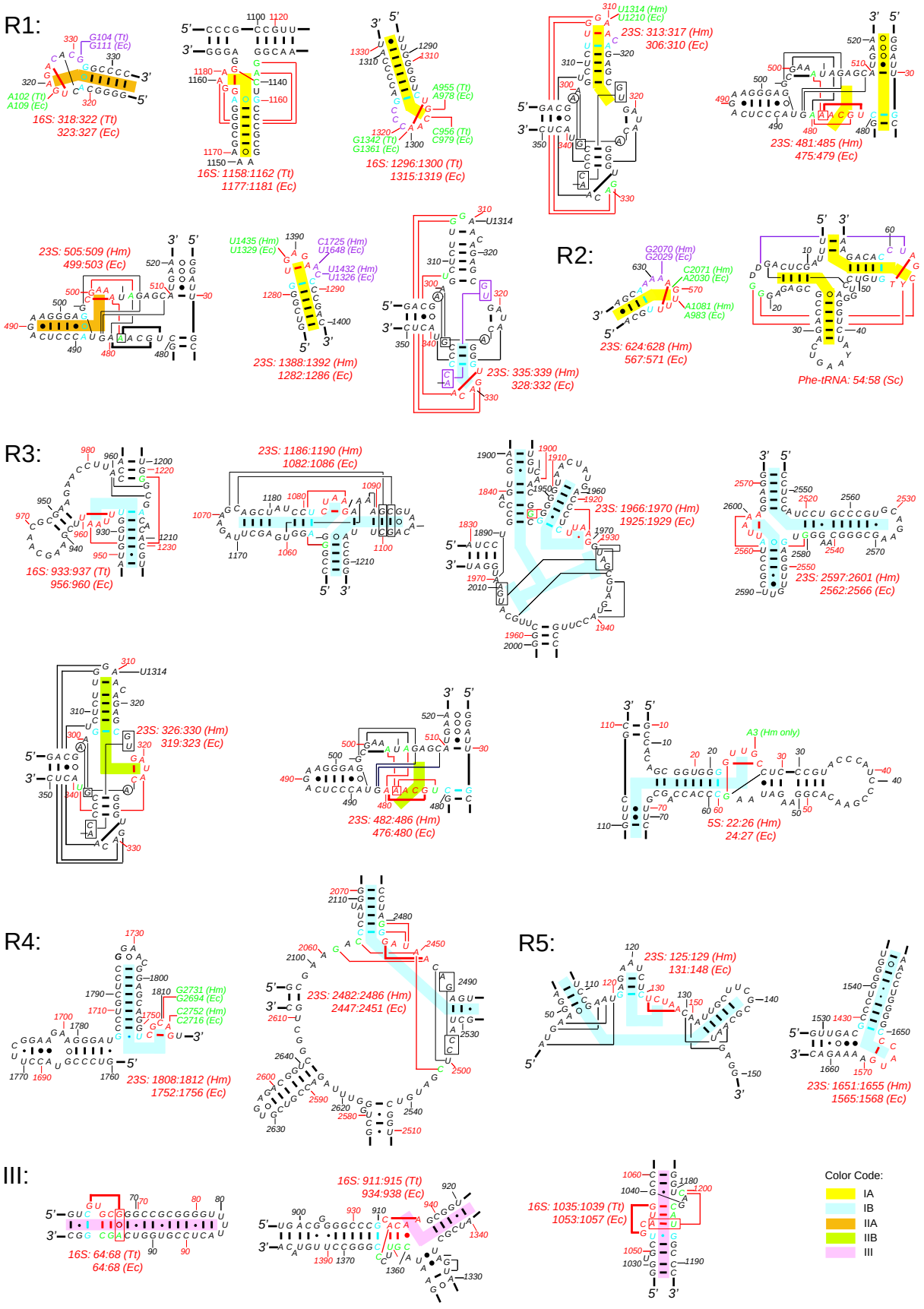
R1:
16S: 318:322 (Tt)
323:327 (Ec)
16S: 1158:1162 (Tt)
1177:1181 (Ec)
16S: 1296:1300 (Tt)
1315:1319 (Ec)
23S: 313:317 (Hm)
306:310 (Ec)
23S: 481:485 (Hm)
475:479 (Ec)
23S: 505:509 (Hm)
499:503 (Ec)
23S: 1388:1392 (Hm)
1282:1286 (Ec)
23S: 335:339 (Hm)
328:332 (Ec)
R2:
23S: 624:628 (Hm)
567:571 (Ec)
Phe-tRNA: 54:58 (Sc)
R3:
16S: 933:937 (Tt)
956:960 (Ec)
23S: 1186:1190 (Hm)
1082:1086 (Ec)
23S: 1966:1970 (Hm)
1925:1929 (Ec)
23S: 2597:2601 (Hm)
2562:2566 (Ec)
23S: 326:330 (Hm)
319:323 (Ec)
23S: 482:486 (Hm)
476:480 (Ec)
5S: 22:26 (Hm)
24:27 (Ec)
R4:
23S: 1808:1812 (Hm)
1752:1756 (Ec)
23S: 2482:2486 (Hm)
2447:2451 (Ec)
R5:
23S: 125:129 (Hm)
131:148 (Ec)
23S: 1651:1655 (Hm)
1565:1568 (Ec)
III:
16S: 64:68 (Tt)
64:68 (Ec)
16S: 911:915 (Tt)
934:938 (Ec)
16S: 1035:1039 (Tt)
1053:1057 (Ec)
Color Code:
IA
IB
IIA
IIB
III