Secondary Structure: large subunit ribosomal RNA - 3' half

Citation and related information available at http://www.rna.icmb.utexas.edu

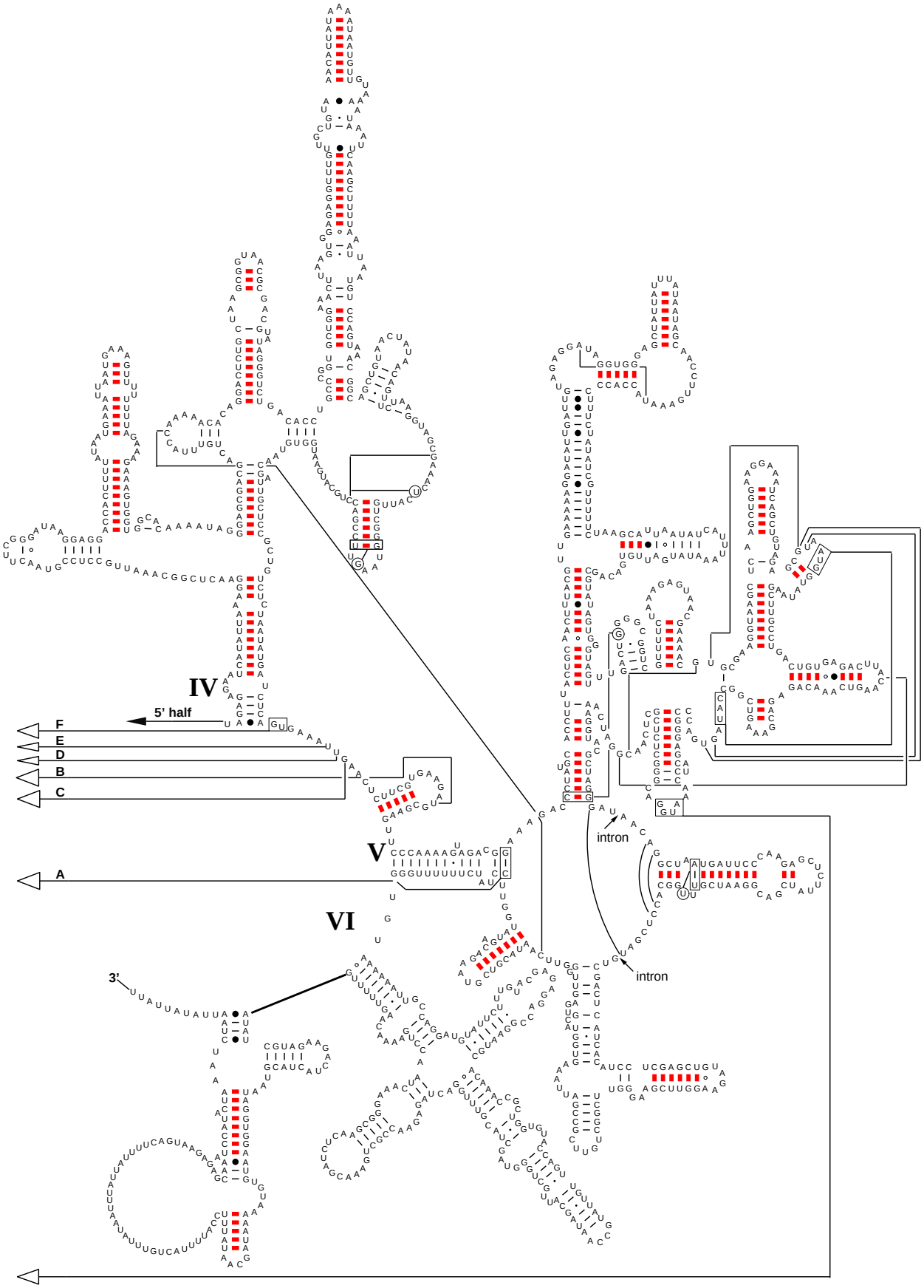

Prototheca wickerhamii: Mitochondrion

Release: *2.2 (May 1997)*
(X68722)

Domain: *Bacteria*
Eucarya phylum: *Protista, Chlorophyta*